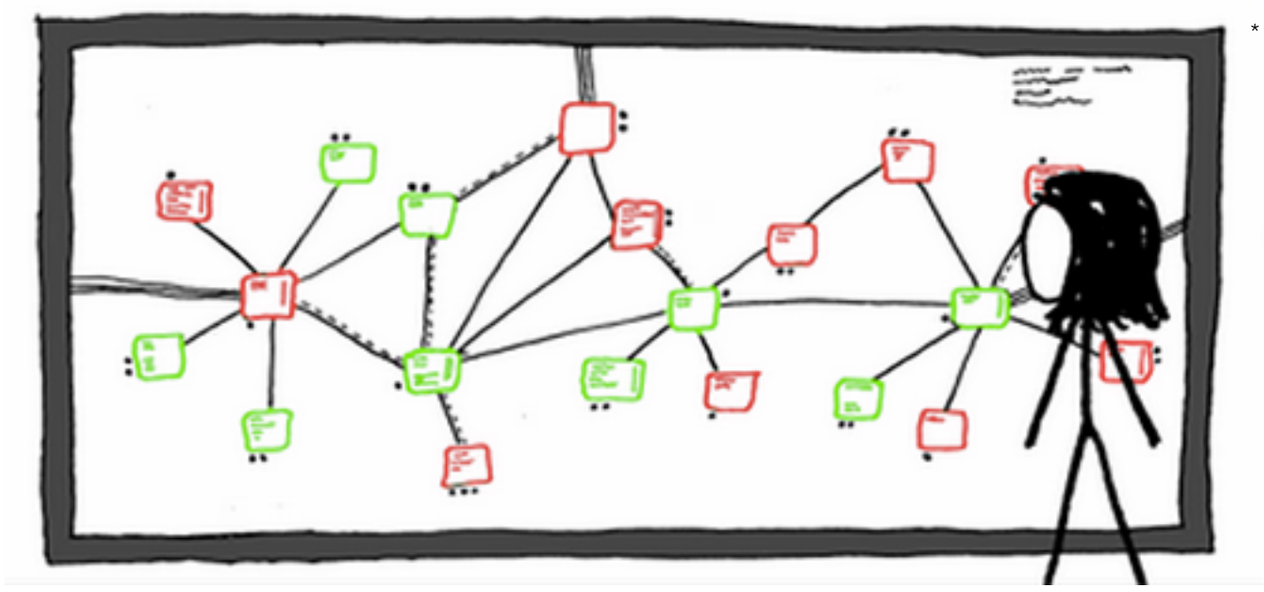

*

The Network Layer

INST346

Cody Buntain: Lecture Slides for *Technologies Infrastructure and Architecture*
Licensed under the Creative Commons Attribution-NonCommercial-ShareAlike License: http://creativecommons.org/licenses/by-nc-sa/2.0/

*Image from Randall Munroe's
https://xkcd.com/350/

Today's Agenda

- Lab 3 due Monday
- Introduction to the network layer, routers, and the Internet Protocol

Licensed under the Creative Commons Attribution-NonCommercial-ShareAlike License: http://creativecommons.org/licenses/by-nc-sa/2.0/

Lab 3 Notes

Cody Buntain: Lecture Slides for *Technologies Infrastructure and Architecture*
Licensed under the Creative Commons Attribution-NonCommercial-ShareAlike License: http://creativecommons.org/licenses/by-nc-sa/2.0/

Lab 3 Notes

- For questions 1 and 2, use provided **wireshark-traces.zip** file
- For part 3, can filter for TCP SYN packets using:
  - tcp.flags.syn == 1

Licensed under the Creative Commons Attribution-NonCommercial-ShareAlike License: http://creativecommons.org/licenses/by-nc-sa/2.0/

Lab 3 Notes

- About Wireshark and TCP sequence numbers…

Licensed under the Creative Commons Attribution-NonCommercial-ShareAlike License: http://creativecommons.org/licenses/by-nc-sa/2.0/

Wi-Fi: en0

tcp

Expression…

No.	Time	Source	Destination	Protocol	Info
308	4.382407	172.16.101.31	173.194.66.188	TCP	60033 → 5228 [ACK] Seq=1 Ack=2 Win…
312	4.950008	172.16.101.31	34.214.30.137	TLSv1…	Application Data
314	5.242475	34.214.30.137	172.16.101.31	TCP	443 → 59711 [ACK] Seq=1 Ack=64 Win…
315	5.242480	34.214.30.137	172.16.101.31	TLSv1…	Application Data
316	5.242554	172.16.101.31	34.214.30.137	TCP	59711 → 443 [ACK] Seq=64 Ack=64 Wi…
332	7.466918	172.16.101.31	128.119.245.12	TCP	60070 → 80 [SYN] Seq=0 Win=65535 L…
333	7.502085	128.119.245.…	172.16.101.31	TCP	80 → 60070 [SYN, ACK] Seq=0 Ack=1 …
334	7.502288	172.16.101.31	128.119.245.12	TCP	60070 → 80 [ACK] Seq=1 Ack=1 Win=1…
335	7.503774	172.16.101.31	128.119.245.12	TCP	60070 → 80 [PSH, ACK] Seq=1 Ack=1 …
336	7.503973	172.16.101.31	128.119.245.12	TCP	60070 → 80 [PSH, ACK] Seq=615 Ack=…
337	7.505969	172.16.101.31	128.119.245.12	TCP	60070 → 80 [ACK] Seq=752 Ack=1 Win…
338	7.505971	172.16.101.31	128.119.245.12	TCP	60070 → 80 [ACK] Seq=2200 Ack=1 Wi…

```
Source Port: 80
Destination Port: 60070
[Stream index: 21]
[TCP Segment Len: 0]
Sequence number: 0    (relative sequence number)
Acknowledgment number: 1    (relative ack number)
1010 .... = Header Length: 40 bytes (10)
▸ Flags: 0x012 (SYN, ACK)
Window size value: 28960
[Calculated window size: 28960]
```

```
0000  70 56 81 c1 c6 11 00 11  74 dd 18 31 08 00 45 20   pV...... t..1..E
0010  00 3c 00 00 40 00 30 06  c3 e8 80 77 f5 0c ac 10   .<..@.0. ...w....
0020  65 1f 00 50 ea a6 c0 73  b9 ef 7b 43 68 bf a0 12   e..P...s ..{Ch...
0030  71 20 5f fc 00 00 02 04  05 b4 04 02 08 0a 59 c8   q _..... ......Y.
0040  0d da 15 a0 29 80 01 03  03 07                     ....)... ..
```

Stream index (tcp.stream) Packets: 556 · Displayed: 499 (89.7%) · Dropped: 0 (0.0%) Profile: Default

Licensed under the Creative Commons Attribution-NonCommercial-ShareAlike License: http://creativecommons.org/licenses/by-nc-sa/2.0/

Wi-Fi: en0

tcp

Expression...

No.	Time	Source	Destination	
308	4.382407	172.16.101.31	173.19	28 [ACK] Seq=1 Ack=2 Win…
312	4.950008	172.16.101.31	34.214	n Data
314	5.242475	34.214.30.137	172.16	1 [ACK] Seq=1 Ack=64 Win…
315	5.242480	34.214.30.137	172.16	n Data
316	5.242554	172.16.101.31	34.214	3 [ACK] Seq=64 Ack=64 Wi…
332	7.466918	172.16.101.31	128.11	[SYN] Seq=0 Win=65535 L…
333	7.502085	128.119.245.…	172.16	[SYN, ACK] Seq=0 Ack=1 …
334	7.502288	172.16.101.31	128.11	[ACK] Seq=1 Ack=1 Win=1…
335	7.503774	172.16.101.31	128.11	[PSH, ACK] Seq=1 Ack=1 …
336	7.503973	172.16.101.31	128.11	[PSH, ACK] Seq=615 Ack=…
337	7.505969	172.16.101.31	128.11	[ACK] Seq=752 Ack=1 Win…
338	7.505971	172.16.101.31	128.11	[ACK] Seq=2200 Ack=1 Wi…

- Expand Subtrees ⇧→
- Expand All ⌘→
- Collapse All ⌘←
- Apply as Column
- Apply as Filter ▶
- Prepare a Filter ▶
- Conversation Filter ▶
- Colorize with Filter ▶
- Follow ▶
- Copy ▶
- Show Packet Bytes...
- Export Packet Bytes... ⌘H
- Wiki Protocol Page
- Filter Field Reference
- Protocol Preferences ▶
- Decode As...
- Go to Linked Packet
- Show Linked Packet in New Window

- Open Transmission Control Protocol preferences...
- ✓ Show TCP summary in protocol tree
- Validate the TCP checksum if possible
- ✓ Allow subdissector to reassemble TCP streams
- ✓ Analyze TCP sequence numbers
- ✓ Relative sequence numbers
- Scaling factor to use when not available from capture ▶
- ✓ Track number of bytes in flight
- Calculate conversation timestamps
- Try heuristic sub-dissectors first
- Ignore TCP Timestamps in summary
- ✓ Do not call subdissectors for error packets
- ✓ TCP Experimental Options with a Magic Number
- Display process information via IPFIX
- TCP UDP port: 0...
- Disable TCP...

```
uence number)
ive ack number)
s (10)
```

```
18 31 08 00 45 20   pV..... t..1..E
30 77 f5 0c ac 10   .<..@.0. ...w....
7b 43 68 bf a0 12   e..P...s ..{Ch...
04 02 08 0a 59 c8   q _..... ......Y.
                    ....)... ..
0040  0d da 15 a0 29 80 01 03  03 07
```

Wi-Fi: en0

tcp

Expression...

No.	Time	Source	Destination	Protocol	Info
304	4.302975	172.16.101.31	172.217.12.164	TCP	60032 → 443 [ACK] Seq=3992346699 A…
305	4.317841	173.194.66.1…	172.16.101.31	TCP	5228 → 60034 [FIN, ACK] Seq=799238…
306	4.317916	172.16.101.31	173.194.66.188	TCP	60034 → 5228 [ACK] Seq=3768234926 …
307	4.382287	173.194.66.1…	172.16.101.31	TCP	5228 → 60033 [FIN, ACK] Seq=382901…
308	4.382407	172.16.101.31	173.194.66.188	TCP	60033 → 5228 [ACK] Seq=2869459025 …
312	4.950008	172.16.101.31	34.214.30.137	TLSv1…	Application Data
314	5.242475	34.214.30.137	172.16.101.31	TCP	443 → 59711 [ACK] Seq=1610528300 A…
315	5.242480	34.214.30.137	172.16.101.31	TLSv1…	Application Data
316	5.242554	172.16.101.31	34.214.30.137	TCP	59711 → 443 [ACK] Seq=2435300804 A…
332	7.466918	172.16.101.31	128.119.245.12	TCP	60070 → 80 [SYN] Seq=2068015294 Wi…
333	7.502085	128.119.245.…	172.16.101.31	TCP	80 → 60070 [SYN, ACK] Seq=32288097…
334	7.502288	172.16.101.31	128.119.245.12	TCP	60070 → 80 [ACK] Seq=2068015295 Ac…

```
▶ Internet Protocol Version 4, Src: 128.119.245.12, Dst: 172.16.101.31
▼ Transmission Control Protocol, Src Port: 80, Dst Port: 60070, Seq: 3228809711, Ack: 20680152
    Source Port: 80
    Destination Port: 60070
    [Stream index: 21]
    [TCP Segment Len: 0]
    Sequence number: 3228809711
    Acknowledgment number: 2068015295
    1010 .... = Header Length: 40 bytes (10)
  ▶ Flags: 0x012 (SYN, ACK)
```

```
0000  70 56 81 c1 c6 11 00 11  74 dd 18 31 08 00 45 20   pV...... t..1..E
0010  00 3c 00 00 40 00 30 06  c3 e8 80 77 f5 0c ac 10   .<..@.0. ...w....
0020  65 1f 00 50 ea a6 c0 73  b9 ef 7b 43 68 bf a0 12   e..P...s ..{Ch...
0030  71 20 5f fc 00 00 02 04  05 b4 04 02 08 0a 59 c8   q _..... ......Y.
0040  0d da 15 a0 29 80 01 03  03 07                     ....)... ..
```

Sequence number (tcp.seq), 4 bytes | Packets: 556 · Displayed: 499 (89.7%) · Dropped: 0 (0.0%) | Profile: Default

Cody Buntain: Lecture Slides for *Technologies Infrastructure and Architecture*
Licensed under the Creative Commons Attribution-NonCommercial-ShareAlike License: http://creativecommons.org/licenses/by-nc-sa/2.0/

Lab 3 Notes

- TCP supports **window scaling** for flow control
  - TCP option to multiply advertised window size
  - Set in TCP SYN packet

Licensed under the Creative Commons Attribution-NonCommercial-ShareAlike License: http://creativecommons.org/licenses/by-nc-sa/2.0/

Wi-Fi: en0

tcp

Expression…

No.	Time	Source	Destination	Protocol	Info
314	5.242475	34.214.30.137	172.16.101.31	TCP	443 → 59711 [ACK] Seq=1610528300 A…
315	5.242480	34.214.30.137	172.16.101.31	TLSv1…	Application Data
316	5.242554	172.16.101.31	34.214.30.137	TCP	59711 → 443 [ACK] Seq=2435300804 A…
332	7.466918	172.16.101.31	128.119.245.12	TCP	60070 → 80 [SYN] Seq=2068015294 Wi…
333	7.502085	128.119.245.…	172.16.101.31	TCP	80 → 60070 [SYN, ACK] Seq=32288097…
334	7.502288	172.16.101.31	128.119.245.12	TCP	60070 → 80 [ACK] Seq=2068015295 Ac…
335	7.503774	172.16.101.31	128.119.245.12	TCP	60070 → 80 [PSH, ACK] Seq=20680152…
336	7.503973	172.16.101.31	128.119.245.12	TCP	60070 → 80 [PSH, ACK] Seq=20680159…
337	7.505969	172.16.101.31	128.119.245.12	TCP	60070 → 80 [ACK] Seq=2068016046 Ac…
338	7.505971	172.16.101.31	128.119.245.12	TCP	60070 → 80 [ACK] Seq=2068017494 Ac…
339	7.537491	128.119.245.…	172.16.101.31	TCP	80 → 60070 [ACK] Seq=3228809712 Ac…
340	7.537496	128.119.245.…	172.16.101.31	TCP	80 → 60070 [ACK] Seq=3228809712 Ac…

```
Checksum: 0x5ffc [unverified]
[Checksum Status: Unverified]
Urgent pointer: 0
▼ Options: (20 bytes), Maximum segment size, SACK permitted, Timestamps, No-Operation (NOP),
  ▶ TCP Option - Maximum segment size: 1460 bytes
  ▶ TCP Option - SACK permitted
  ▶ TCP Option - Timestamps: TSval 1506282970, TSecr 362817920
  ▶ TCP Option - No-Operation (NOP)
  ▶ TCP Option - Window scale: 7 (multiply by 128)
▶ [SEQ/ACK analysis]
```

```
0000  70 56 81 c1 c6 11 00 11  74 dd 18 31 08 00 45 20   pV...... t..1..E
0010  00 3c 00 00 40 00 30 06  c3 e8 80 77 f5 0c ac 10   .<..@.0. ...w....
0020  65 1f 00 50 ea a6 c0 73  b9 ef 7b 43 68 bf a0 12   e..P...s ..{Ch...
0030  71 20 5f fc 00 00 02 04  05 b4 04 02 08 0a 59 c8   q _..... ......Y.
0040  0d da 15 a0 29 80 01 03  03 07                     ....)... ..
```

TCP Option - Window scale (tcp.options.wscale), 3 bytes | Packets: 556 · Displayed: 499 (89.7%) · Dropped: 0 (0.0%) | Profile: Default

Licensed under the Creative Commons Attribution-NonCommercial-ShareAlike License: http://creativecommons.org/licenses/by-nc-sa/2.0/

Wi-Fi: en0

tcp

Expression...

No.	Time	Source	Destination	Protocol	Info
339	7.537491	128.119.245.…	172.16.101.31	TCP	80 → 60070 [ACK] Seq=3228809712 Ac…
340	7.537496	128.119.245.…	172.16.101.31	TCP	80 → 60070 [ACK] Seq=3228809712 Ac…
341	7.537497	128.119.245.…	172.16.101.31	TCP	80 → 60070 [ACK] Seq=3228809712 Ac…
342	7.537498	128.119.245.…	172.16.101.31	TCP	80 → 60070 [ACK] Seq=3228809712 Ac…
343	7.537625	172.16.101.31	128.119.245.12	TCP	60070 → 80 [ACK] Seq=2068018942 Ac…
344	7.537626	172.16.101.31	128.119.245.12	TCP	60070 → 80 [ACK] Seq=2068020390 Ac…
345	7.537626	172.16.101.31	128.119.245.12	TCP	60070 → 80 [ACK] Seq=2068021838 Ac…
346	7.537627	172.16.101.31	128.119.245.12	TCP	60070 → 80 [ACK] Seq=2068023286 Ac…
347	7.537628	172.16.101.31	128.119.245.12	TCP	60070 → 80 [ACK] Seq=2068024734 Ac…
348	7.565095	128.119.245.…	172.16.101.31	TCP	80 → 60070 [ACK] Seq=3228809712 Ac…
349	7.565111	128.119.245.…	172.16.101.31	TCP	80 → 60070 [ACK] Seq=3228809712 Ac…
350	7.565117	128.119.245.…	172.16.101.31	TCP	80 → 60070 [ACK] Seq=3228809712 Ac…

```
    1000 .... = Header Length: 32 bytes (8)
  ▸ Flags: 0x010 (ACK)
    Window size value: 314
    [Calculated window size: 40192]
    [Window size scaling factor: 128]
    Checksum: 0xea3f [unverified]
    [Checksum Status: Unverified]
    Urgent pointer: 0
  ▸ Options: (12 bytes), No-Operation (NOP), No-Operation (NOP), Timestamps
  ▸ [SEQ/ACK analysis]
```

```
0000  70 56 81 c1 c6 11 00 11  74 dd 18 31 08 00 45 20   pV...... t..1..E
0010  00 34 b7 f6 40 00 30 06  0b fa 80 77 f5 0c ac 10   .4..@.0. ...w....
0020  65 1f 00 50 ea a6 c0 73  b9 f0 7b 43 7c a6 80 10   e..P...s ..{C|...
0030  01 3a ea 3f 00 00 01 01  08 0a 59 c8 0e 1e 15 a0   .:.?.... ..Y.....
0040  29 c4                                             ).
```

The scaled window size (if scaling has been used) (tcp.window_size), 2 bytes | Packets: 556 · Displayed: 499 (89.7%) · Dropped: 0 (0.0%) | Profile: Default

Licensed under the Creative Commons Attribution-NonCommercial-ShareAlike License: http://creativecommons.org/licenses/by-nc-sa/2.0/

Lab 3 Notes

- Wireshark and RTT estimation

Licensed under the Creative Commons Attribution-NonCommercial-ShareAlike License: http://creativecommons.org/licenses/by-nc-sa/2.0/

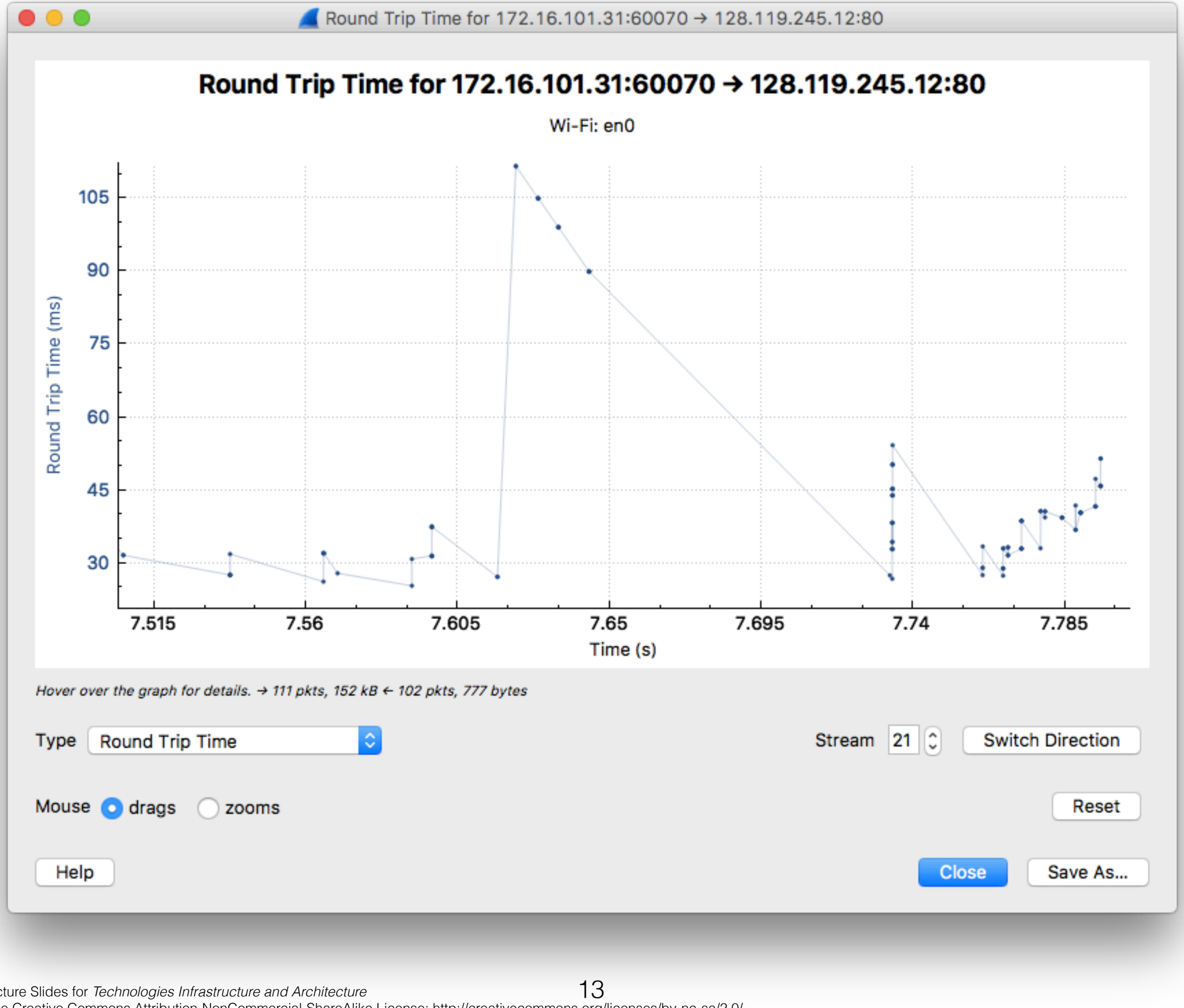

Licensed under the Creative Commons Attribution-NonCommercial-ShareAlike License: http://creativecommons.org/licenses/by-nc-sa/2.0/

Questions about Lab 3?

Licensed under the Creative Commons Attribution-NonCommercial-ShareAlike License: http://creativecommons.org/licenses/by-nc-sa/2.0/

Where We've Been

- Covered application and transport layers
  - What happens **on hosts** at the very edge of the network
- Abstracted away the mechanics for moving a packet from host A to host B

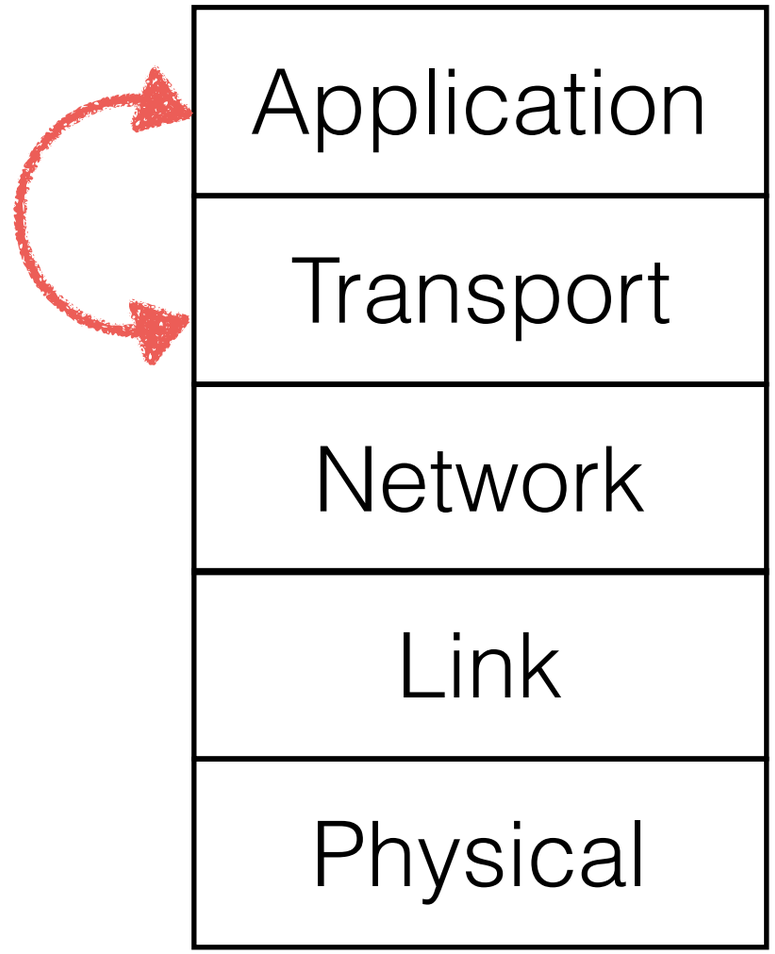

Licensed under the Creative Commons Attribution-NonCommercial-ShareAlike License: http://creativecommons.org/licenses/by-nc-sa/2.0/

Where We've Been

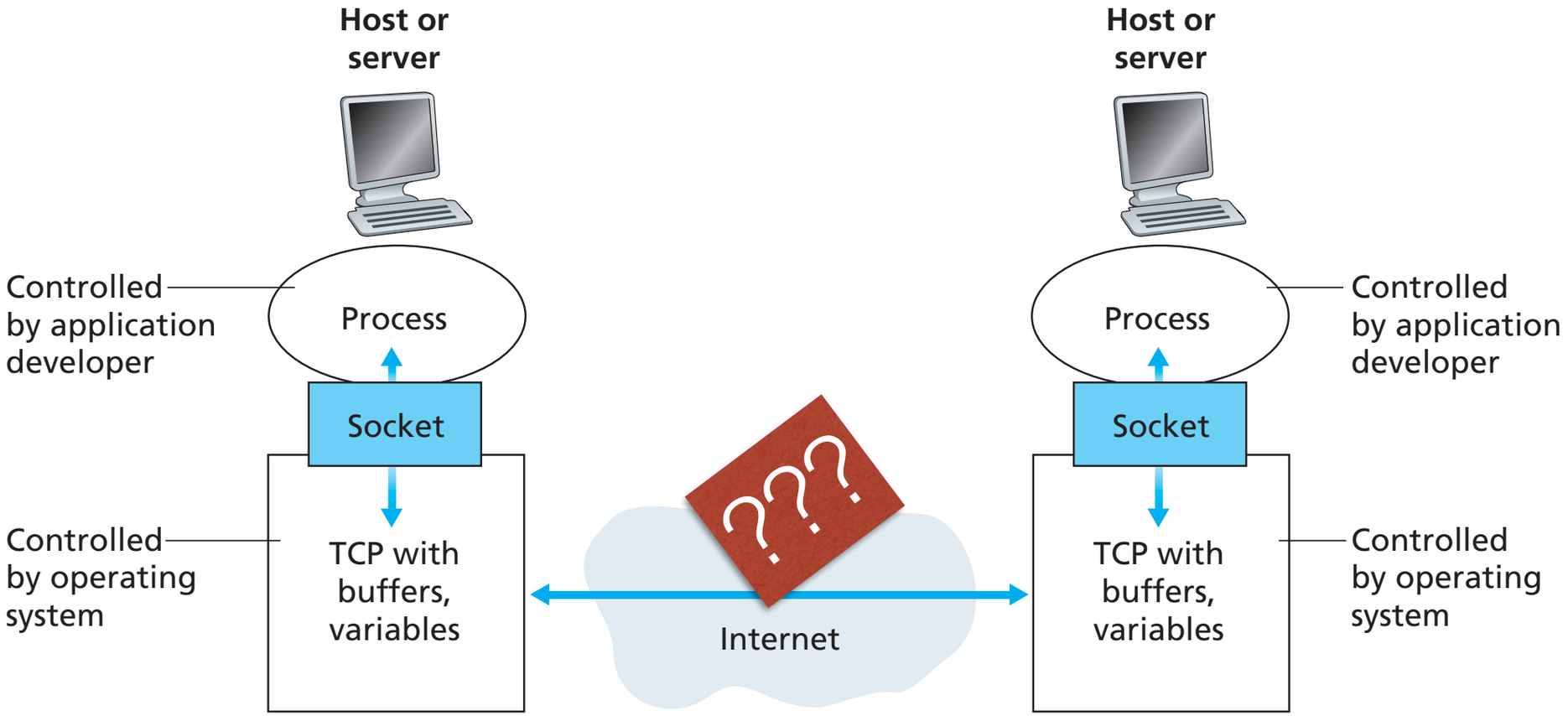

Cody Buntain: Lecture Slides for *Technologies Infrastructure and Architecture*
Licensed under the Creative Commons Attribution-NonCommercial-ShareAlike License: http://creativecommons.org/licenses/by-nc-sa/2.0/

Where We're Going

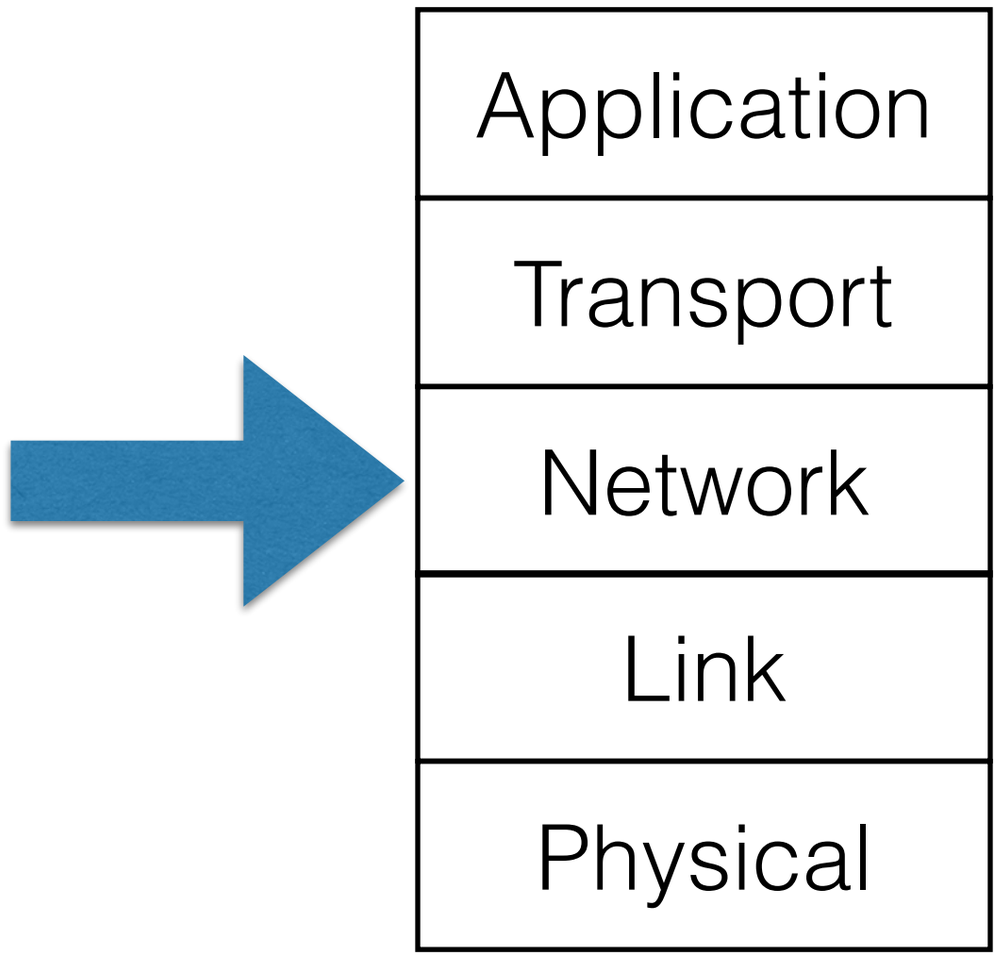

Licensed under the Creative Commons Attribution-NonCommercial-ShareAlike License: http://creativecommons.org/licenses/by-nc-sa/2.0/

Where We're Going

- How are computers **addressed** on the Internet?
- How does a router **forward** a packet from one link to the next?
- How does the network know how to **route** packets between two distant hosts?

Licensed under the Creative Commons Attribution-NonCommercial-ShareAlike License: http://creativecommons.org/licenses/by-nc-sa/2.0/

Where We're Going

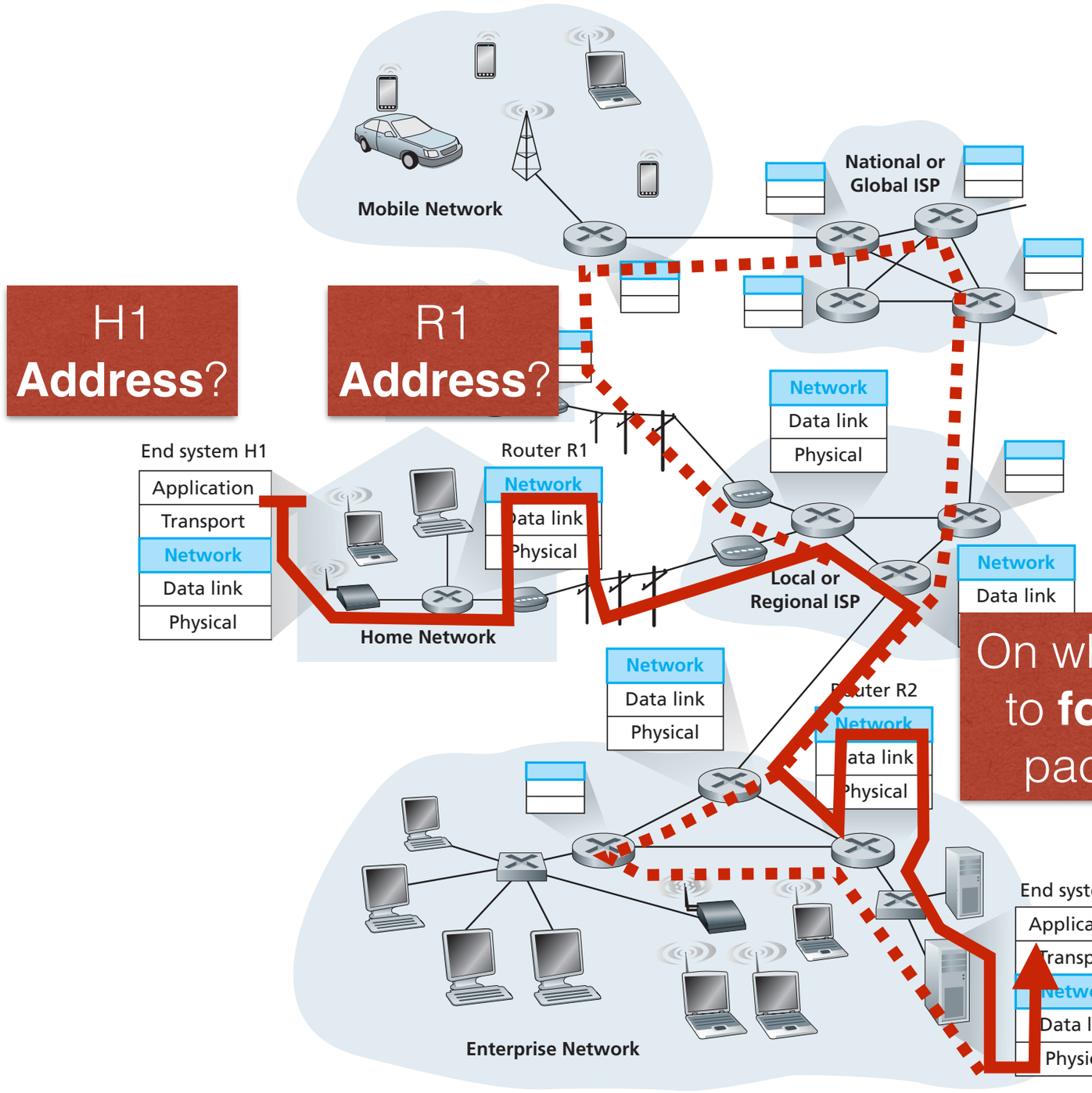

Cody Buntain: Lecture Slides for *Technologies Infrastructure and Architecture*
Licensed under the Creative Commons Attribution-NonCommercial-ShareAlike License: http://creativecommons.org/licenses/by-nc-sa/2.0/

The Network Layer

- What is the purpose of the network layer?

- To route packets from the source to the destination host

- These datagram packets contain transport-layer segments

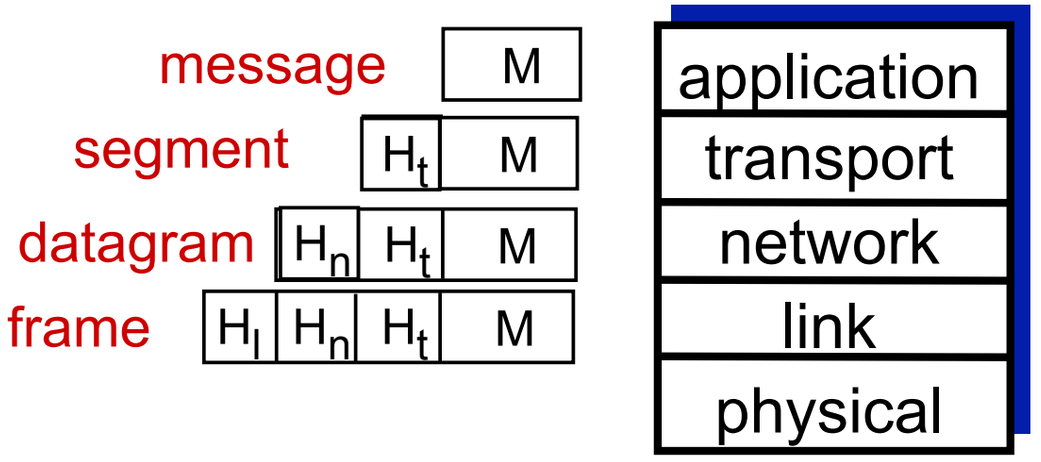

Licensed under the Creative Commons Attribution-NonCommercial-ShareAlike License: http://creativecommons.org/licenses/by-nc-sa/2.0/

The Network Layer

- The **transport layer** is implemented in end hosts*
  - * and firewalls
- Where is the **network layer** implemented?
  - Throughout the network core

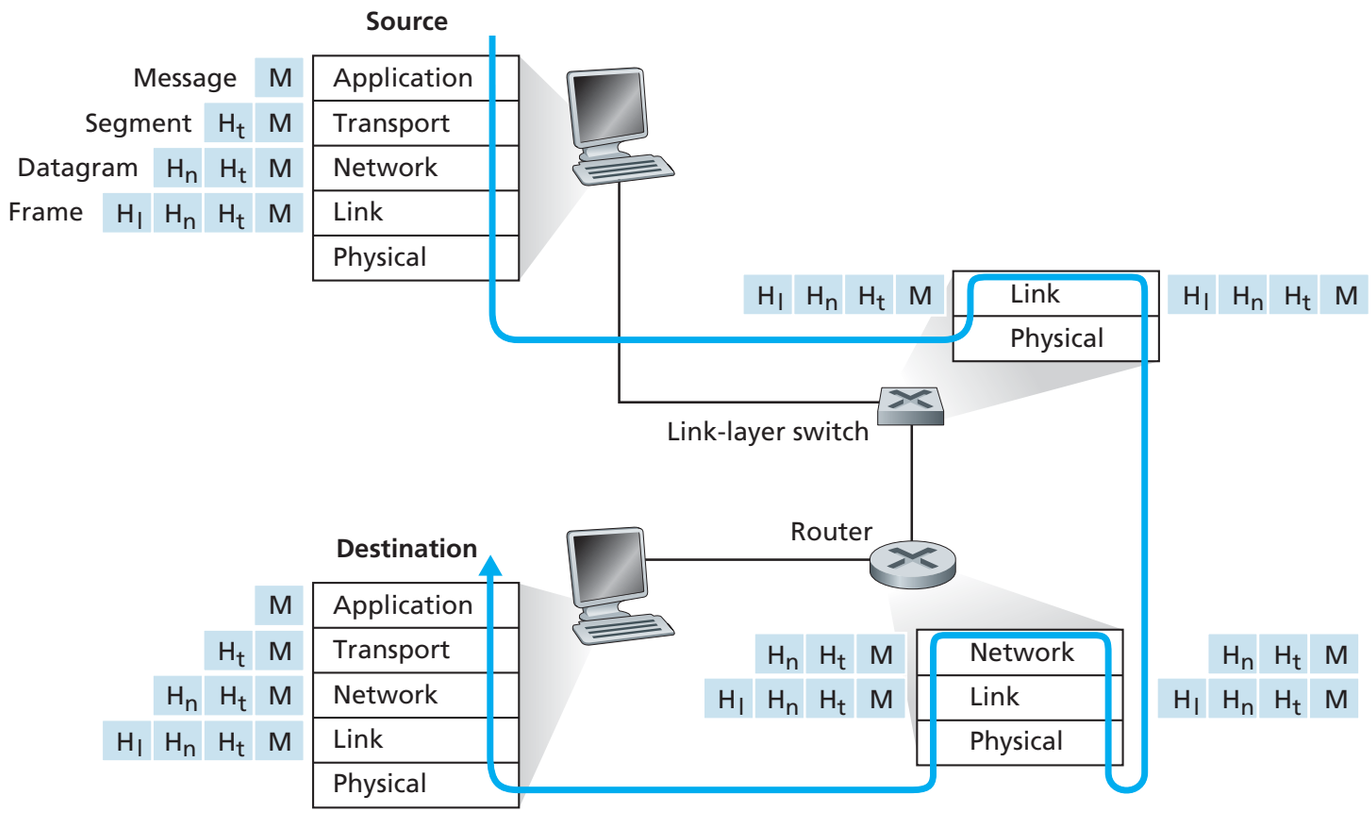

Licensed under the Creative Commons Attribution-NonCommercial-ShareAlike License: http://creativecommons.org/licenses/by-nc-sa/2.0/

The Network Layer

- **Every host and router** in the network touches the datagram
  - Router must examine IP headers of every packet
  - Determine output link, time-to-live, checksum, service, fragment, etc.

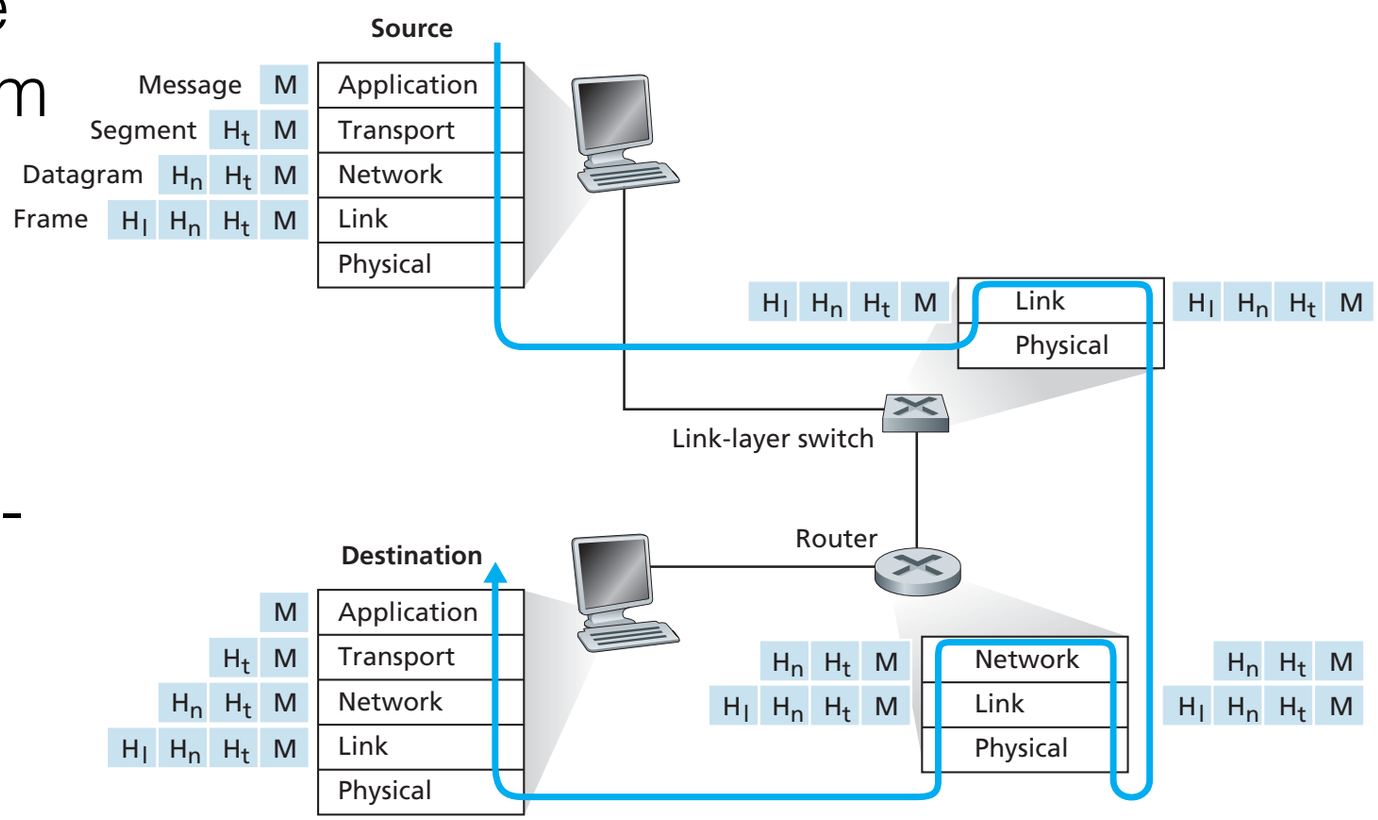

Cody Buntain: Lecture Slides for *Technologies Infrastructure and Architecture*
Licensed under the Creative Commons Attribution-NonCommercial-ShareAlike License: http://creativecommons.org/licenses/by-nc-sa/2.0/

The Network Layer

- Important Terminology
  - L2 packet switch
    - Link-layer device
      - Does not route between networks/subnets
  - L3 packet switch
    - aka, **Router**
    - Routes between subnets

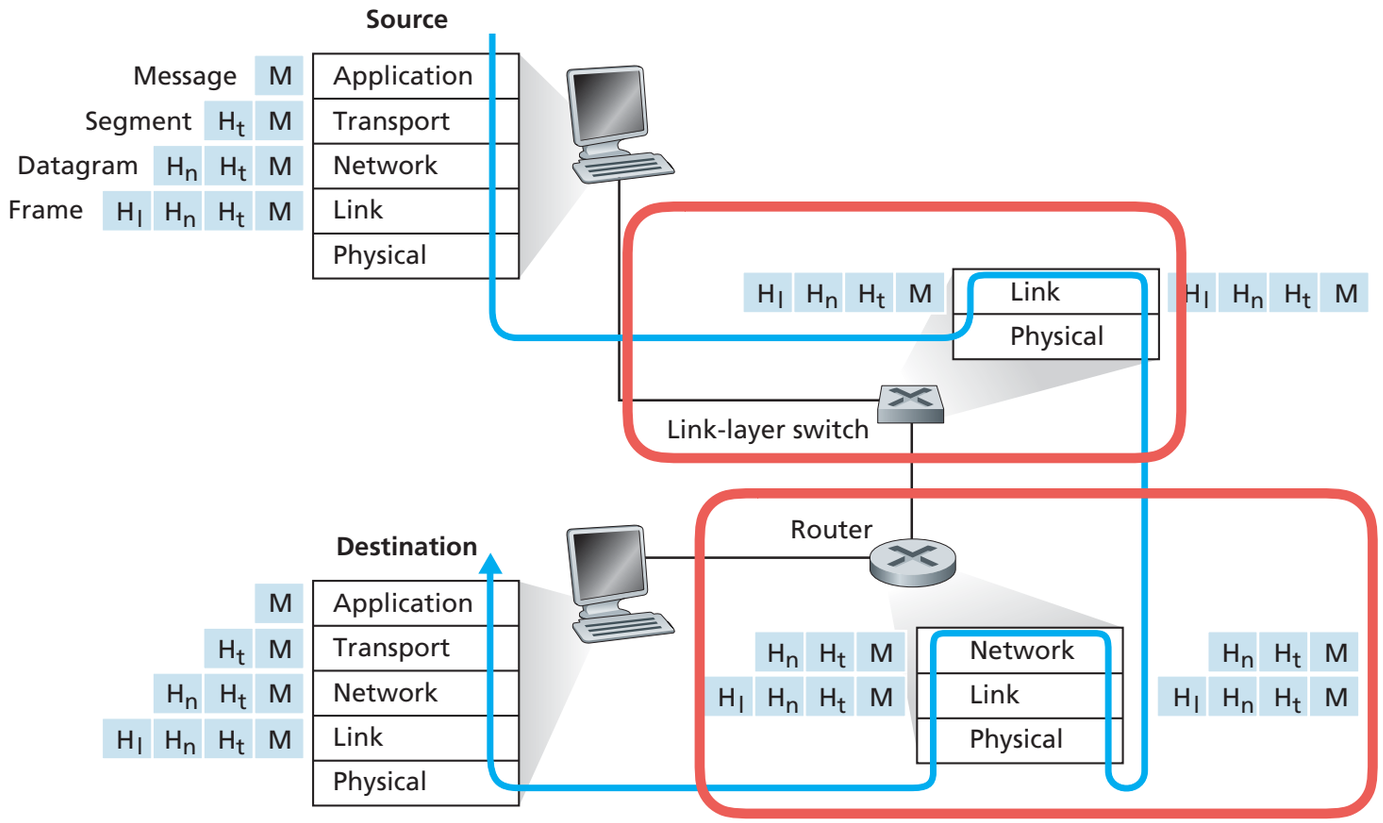

Licensed under the Creative Commons Attribution-NonCommercial-ShareAlike License: http://creativecommons.org/licenses/by-nc-sa/2.0/

The Network Layer

- As with the transport layer, protocols in the network layer provide services
- Examples of **possible** network-layer services:
  - Best-effort delivery (IP)
  - Security (IPsec)
  - Reliable delivery (ATM)
  - Congestion control/notification (ATM)
  - Bandwidth/delay guarantees (ATM)

Licensed under the Creative Commons Attribution-NonCommercial-ShareAlike License: http://creativecommons.org/licenses/by-nc-sa/2.0/

The Network Layer

- The Internet Protocol provides a **best-effort**, **connectionless** service
  - No delivery, throughput, delay, etc. guarantees
  - No handshaking or connection setup/teardown
  - Packets are sent through the network, and each router decides where/how to send (or drop) it
    - Called a **datagram network**

Licensed under the Creative Commons Attribution-NonCommercial-ShareAlike License: http://creativecommons.org/licenses/by-nc-sa/2.0/

The Network Layer

- Are datagram networks the only kind of network?
- No. Connection-oriented networks also exist
  - Generally circuit-based (aka virtual circuit)
  - ATM, used by DSL and telephone companies
  - Legacy artifact of telephones; less popular

Licensed under the Creative Commons Attribution-NonCommercial-ShareAlike License: http://creativecommons.org/licenses/by-nc-sa/2.0/

Questions about the Network Layer in general?

Licensed under the Creative Commons Attribution-NonCommercial-ShareAlike License: http://creativecommons.org/licenses/by-nc-sa/2.0/

Brief Intro to IP Addresses

- Have mentioned a host's "**IP address**" several times
  - What is its purpose?
  - What is its format?
  - How is it used?
  - How is it assigned?

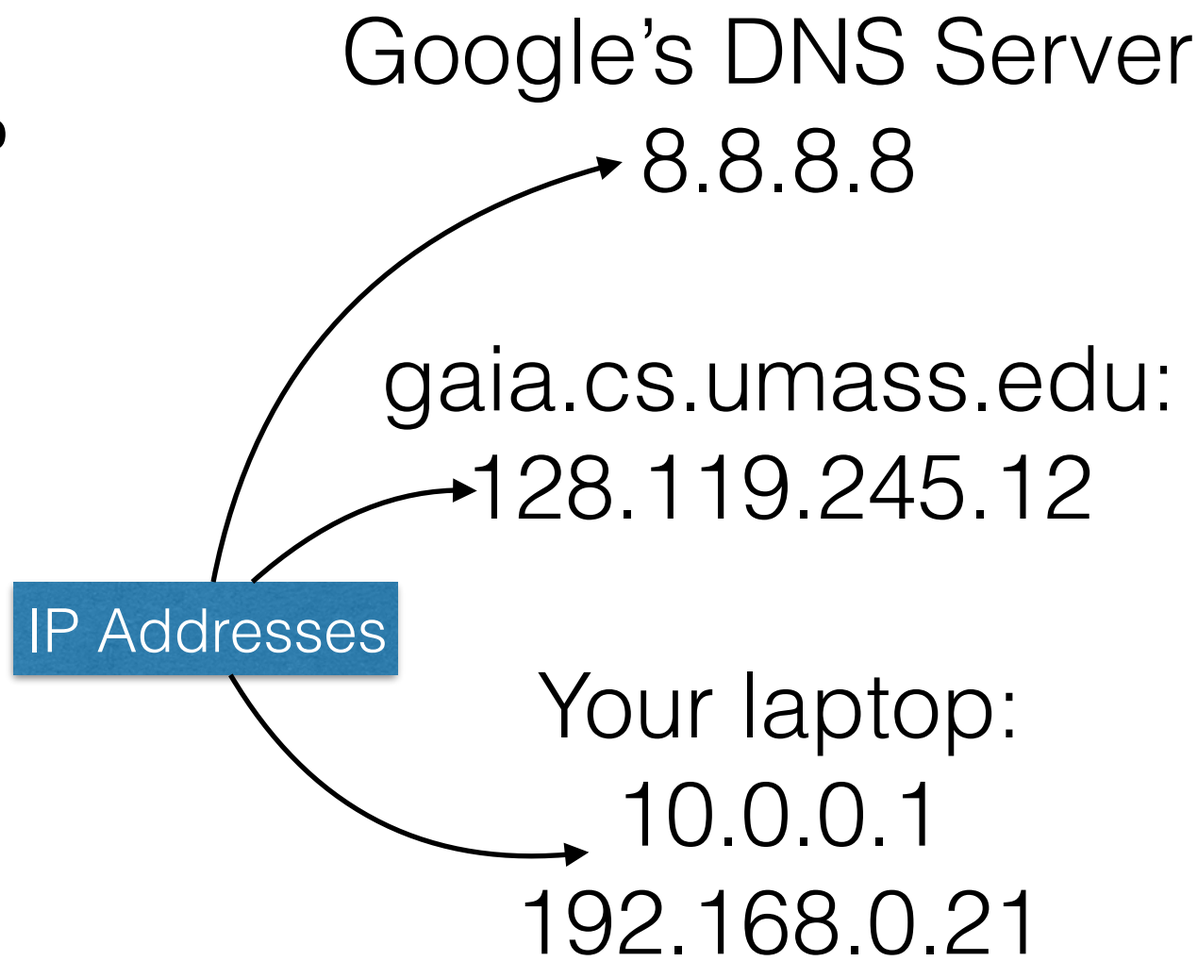

Licensed under the Creative Commons Attribution-NonCommercial-ShareAlike License: http://creativecommons.org/licenses/by-nc-sa/2.0/

Routers

Licensed under the Creative Commons Attribution-NonCommercial-ShareAlike License: http://creativecommons.org/licenses/by-nc-sa/2.0/

Routers

- The big question:
  - Routers, how do they work?
  - How do routers **forward** packets between links?
  - How does the network **route** packets between hosts?
    - Chapter 5

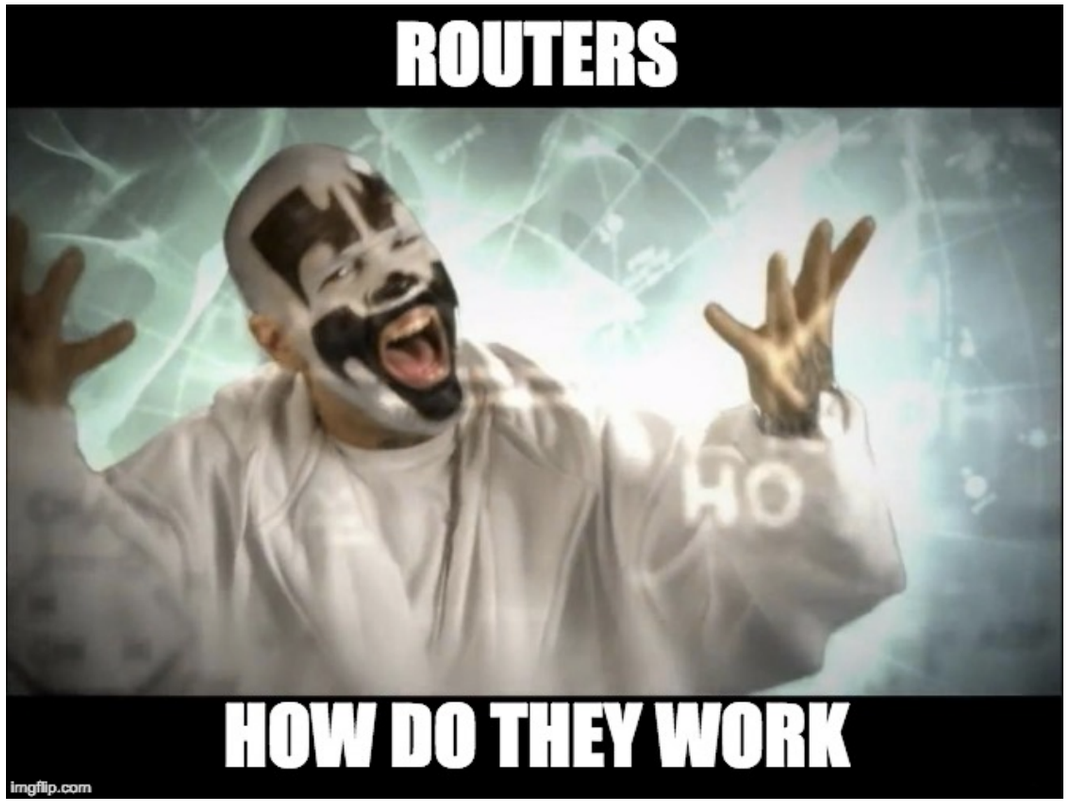

Licensed under the Creative Commons Attribution-NonCommercial-ShareAlike License: http://creativecommons.org/licenses/by-nc-sa/2.0/

Routers

- Forwarding versus Routing
  - Forwarding - a single router moving a packet from an input interface to an output interface
    - Forwarding tables
  - Routing - the network determines the path from host A to host B
    - Routing algorithms

Licensed under the Creative Commons Attribution-NonCommercial-ShareAlike License: http://creativecommons.org/licenses/by-nc-sa/2.0/

Routers

- **Forwarding tables** are built from **routing tables**
- **Routing tables** built from **routing algorithms**
- Routers perform both these functions

Licensed under the Creative Commons Attribution-NonCommercial-ShareAlike License: http://creativecommons.org/licenses/by-nc-sa/2.0/

Routers

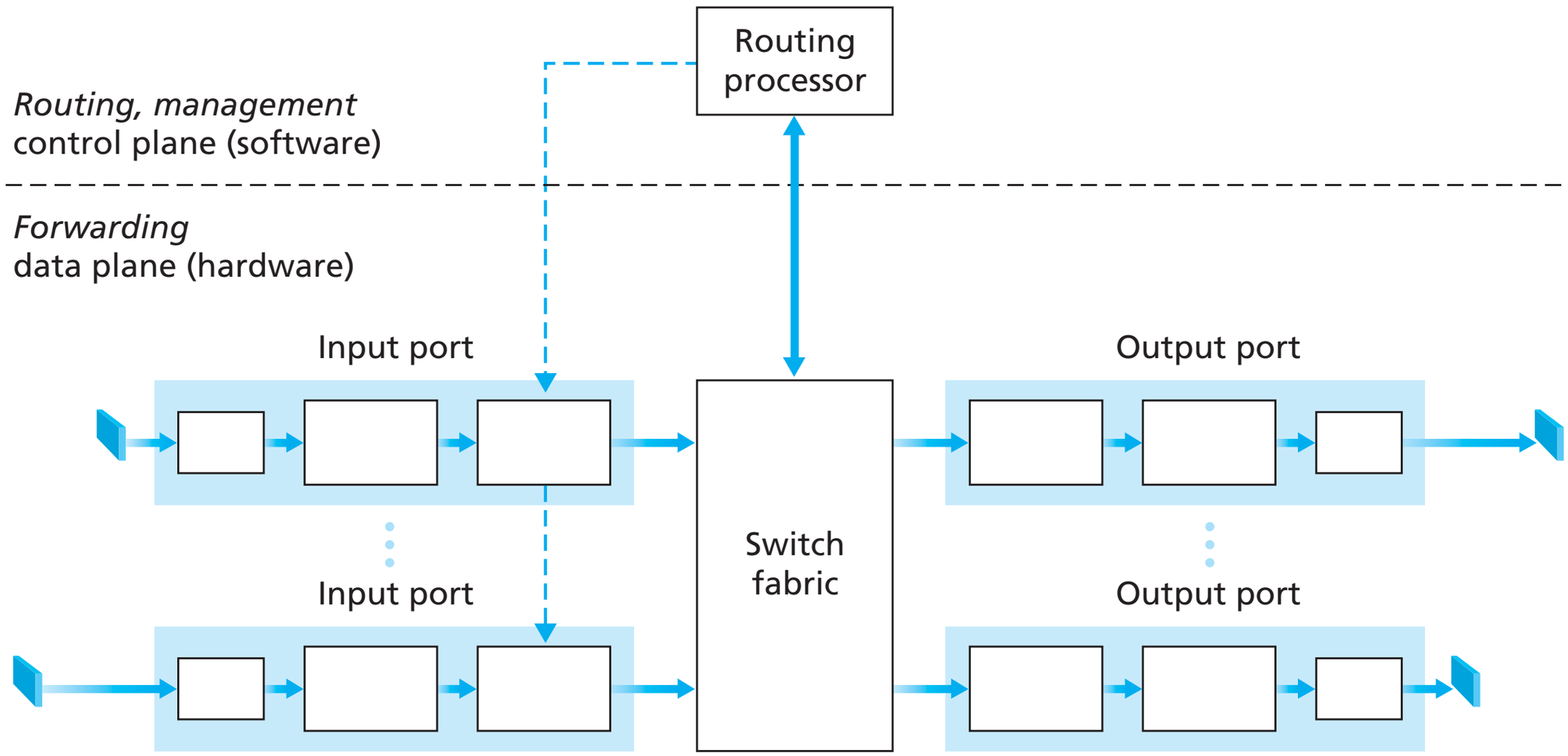

Cody Buntain: Lecture Slides for *Technologies Infrastructure and Architecture*
Licensed under the Creative Commons Attribution-NonCommercial-ShareAlike License: http://creativecommons.org/licenses/by-nc-sa/2.0/

Routers

Simplified for unidirectional comm. Duplicated for bidirectional comm.

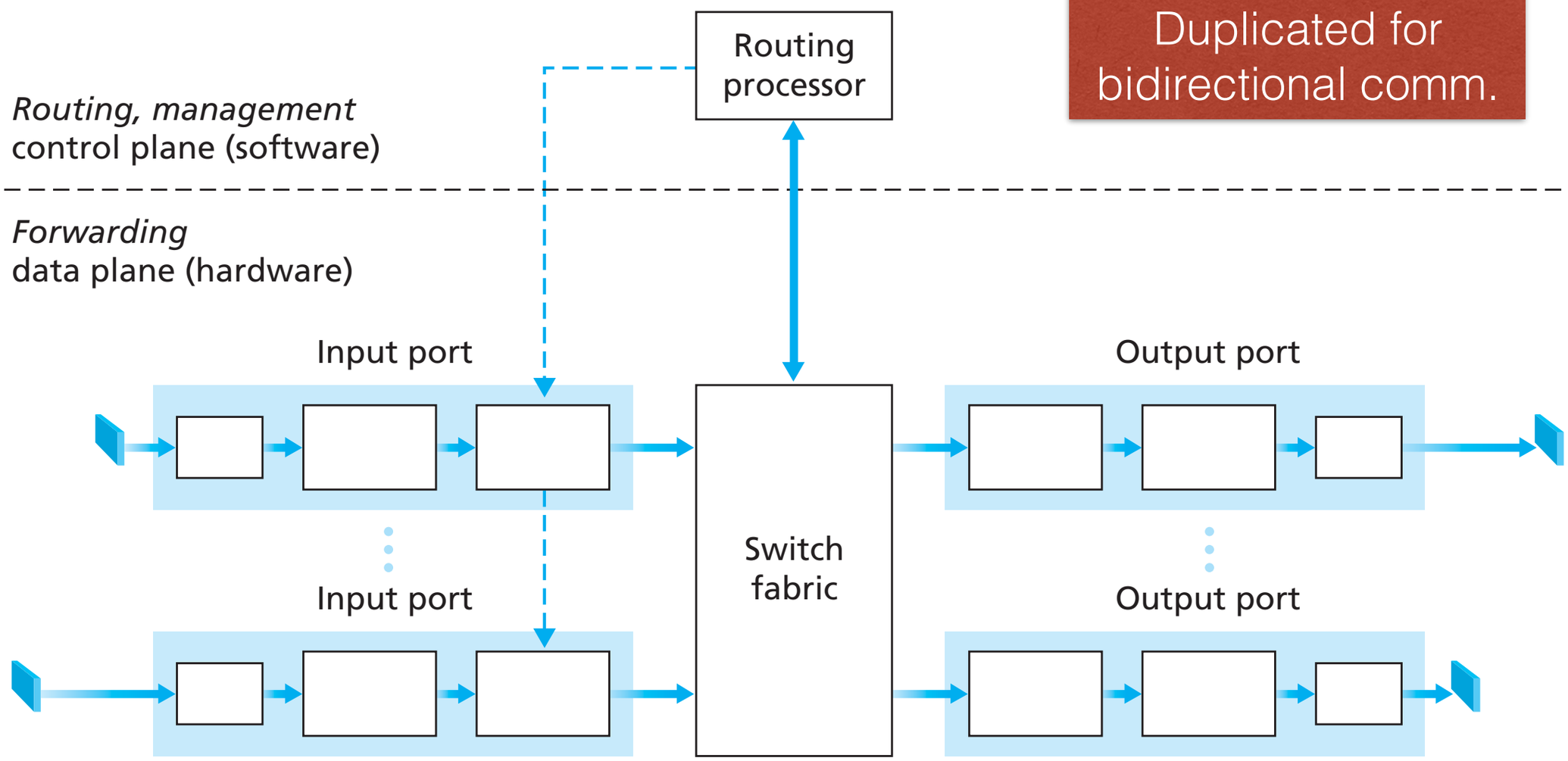

Cody Buntain: Lecture Slides for *Technologies Infrastructure and Architecture*
Licensed under the Creative Commons Attribution-NonCommercial-ShareAlike License: http://creativecommons.org/licenses/by-nc-sa/2.0/

Routers

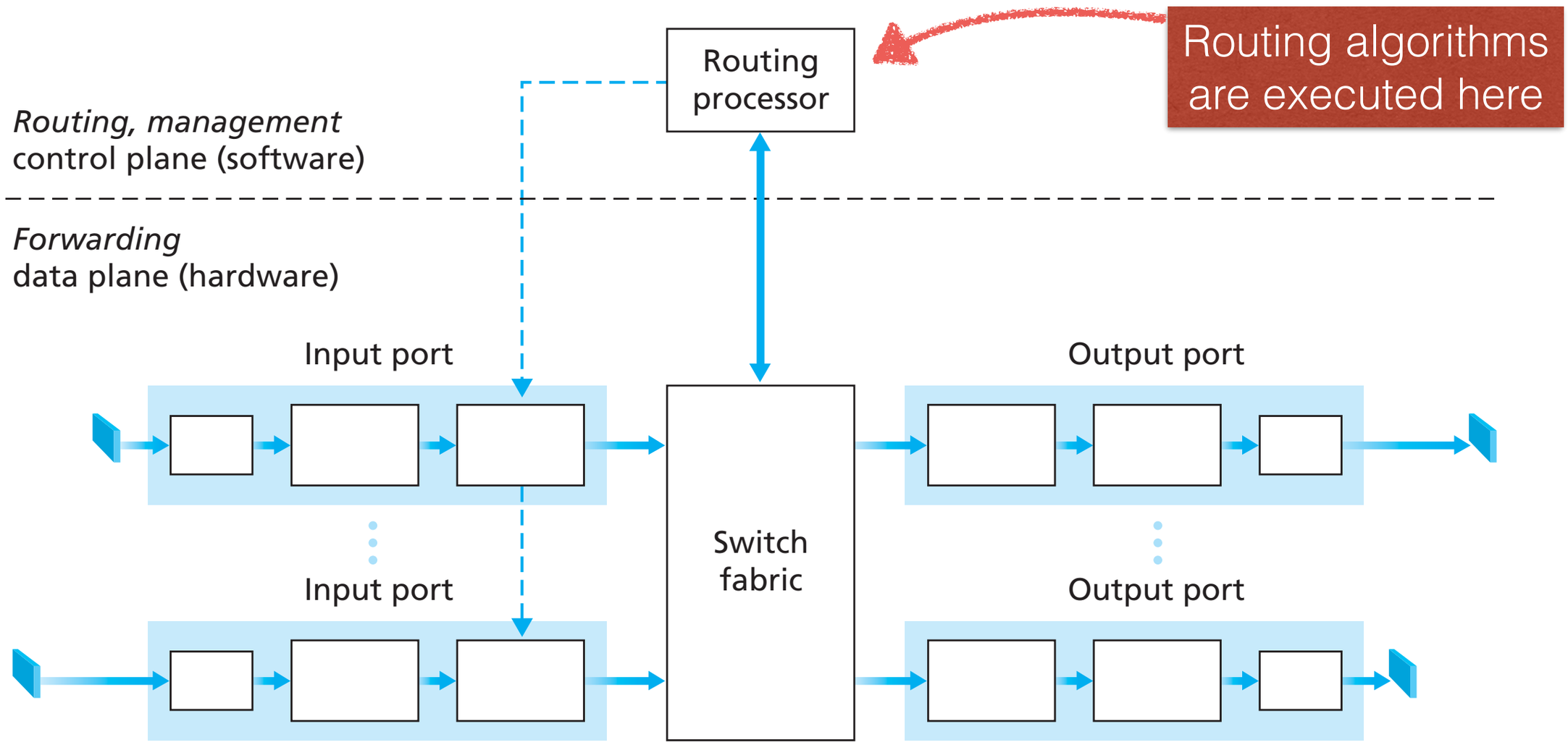

Cody Buntain: Lecture Slides for *Technologies Infrastructure and Architecture*
Licensed under the Creative Commons Attribution-NonCommercial-ShareAlike License: http://creativecommons.org/licenses/by-nc-sa/2.0/

Routers

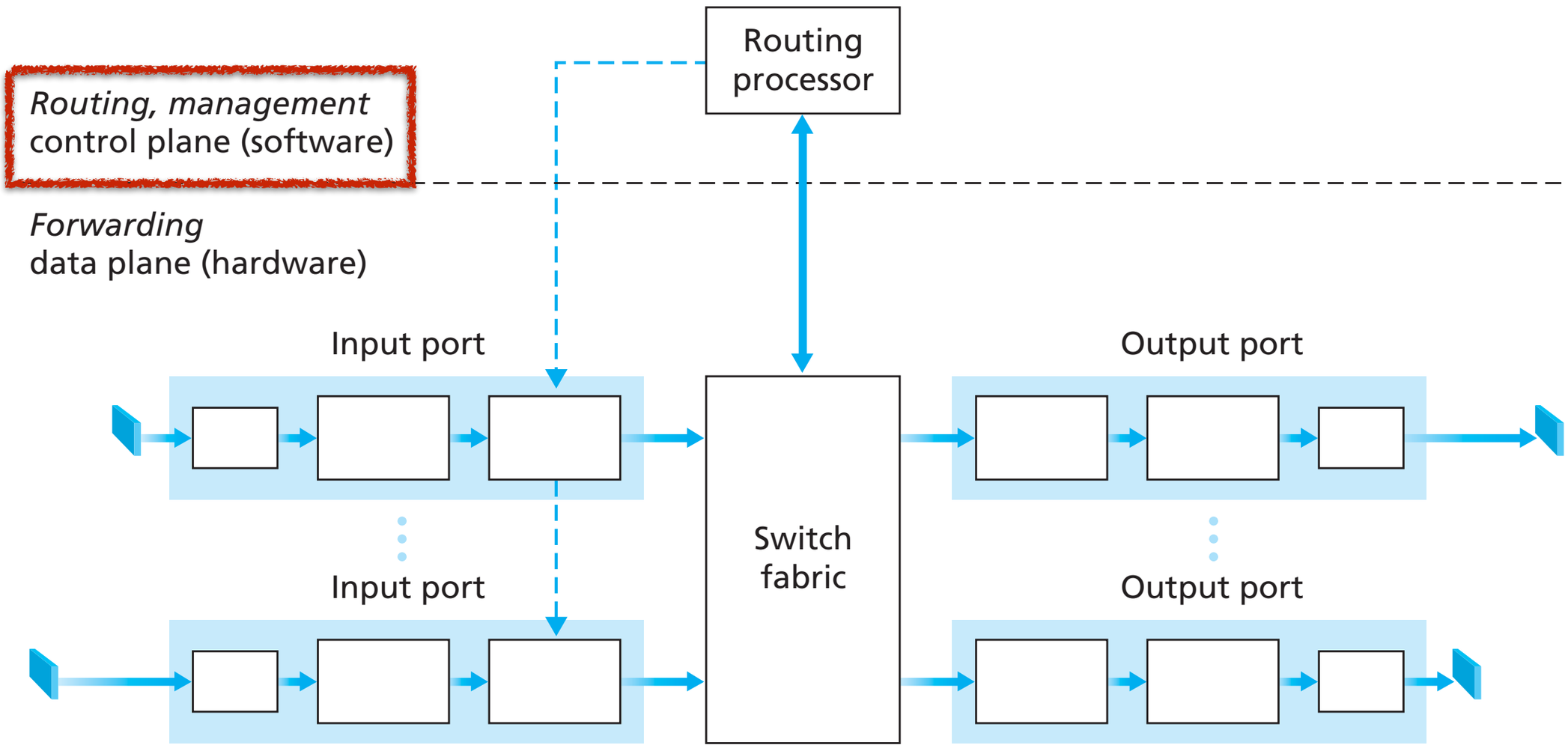

Cody Buntain: Lecture Slides for *Technologies Infrastructure and Architecture*
Licensed under the Creative Commons Attribution-NonCommercial-ShareAlike License: http://creativecommons.org/licenses/by-nc-sa/2.0/

Routers

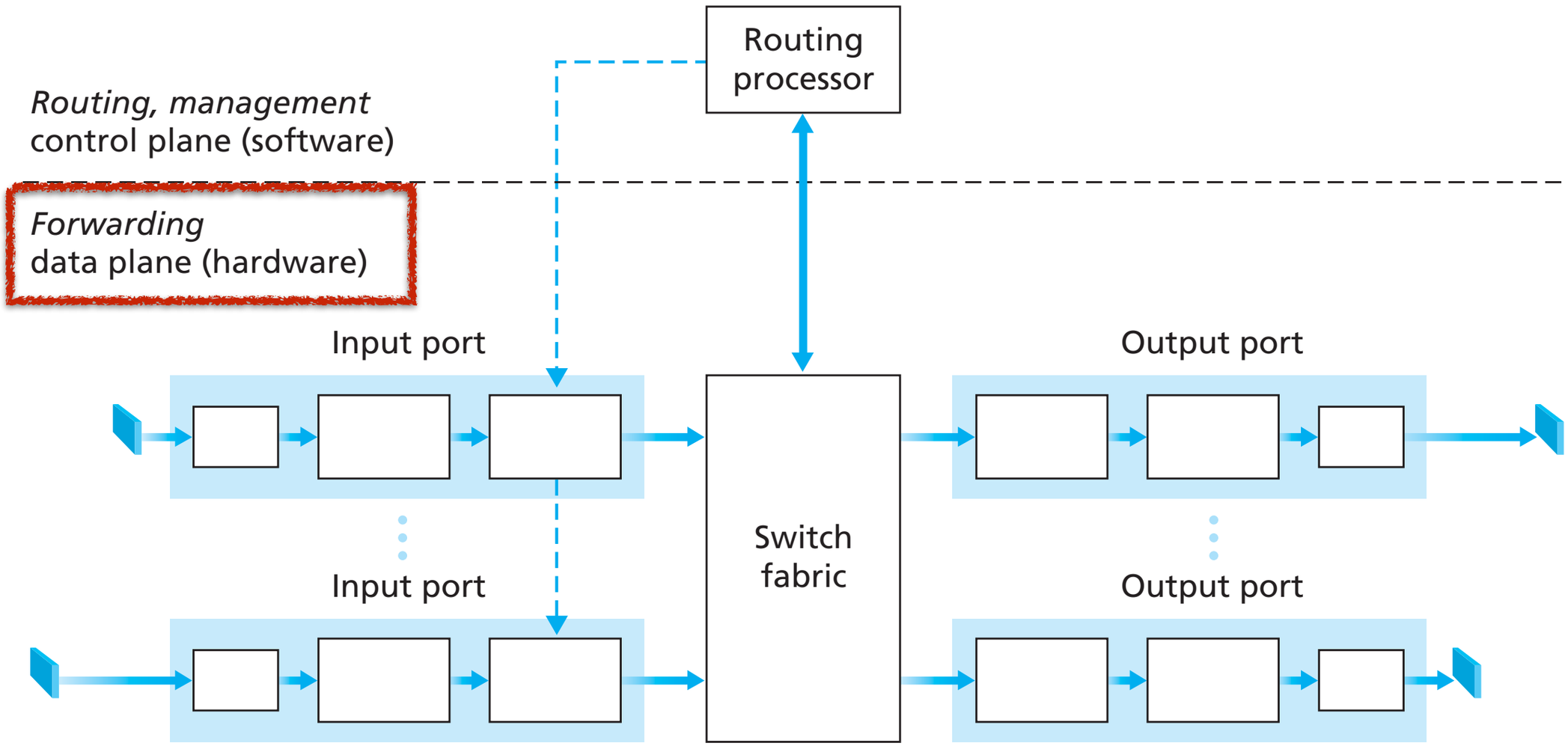

Cody Buntain: Lecture Slides for *Technologies Infrastructure and Architecture*
Licensed under the Creative Commons Attribution-NonCommercial-ShareAlike License: http://creativecommons.org/licenses/by-nc-sa/2.0/

Routers

Packets are accepted and queued on input ports

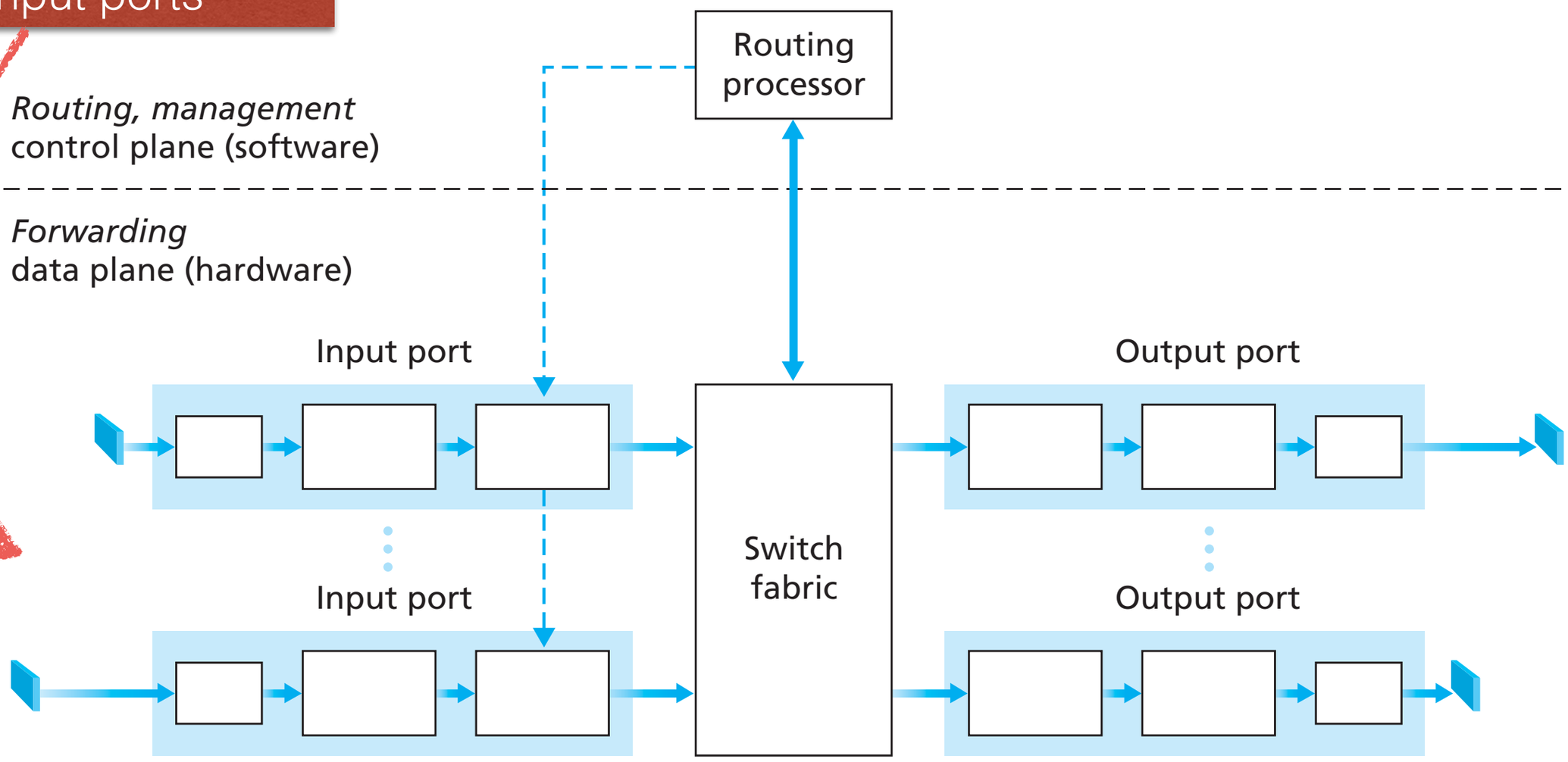

Cody Buntain: Lecture Slides for *Technologies Infrastructure and Architecture*
Licensed under the Creative Commons Attribution-NonCommercial-ShareAlike License: http://creativecommons.org/licenses/by-nc-sa/2.0/

Routers

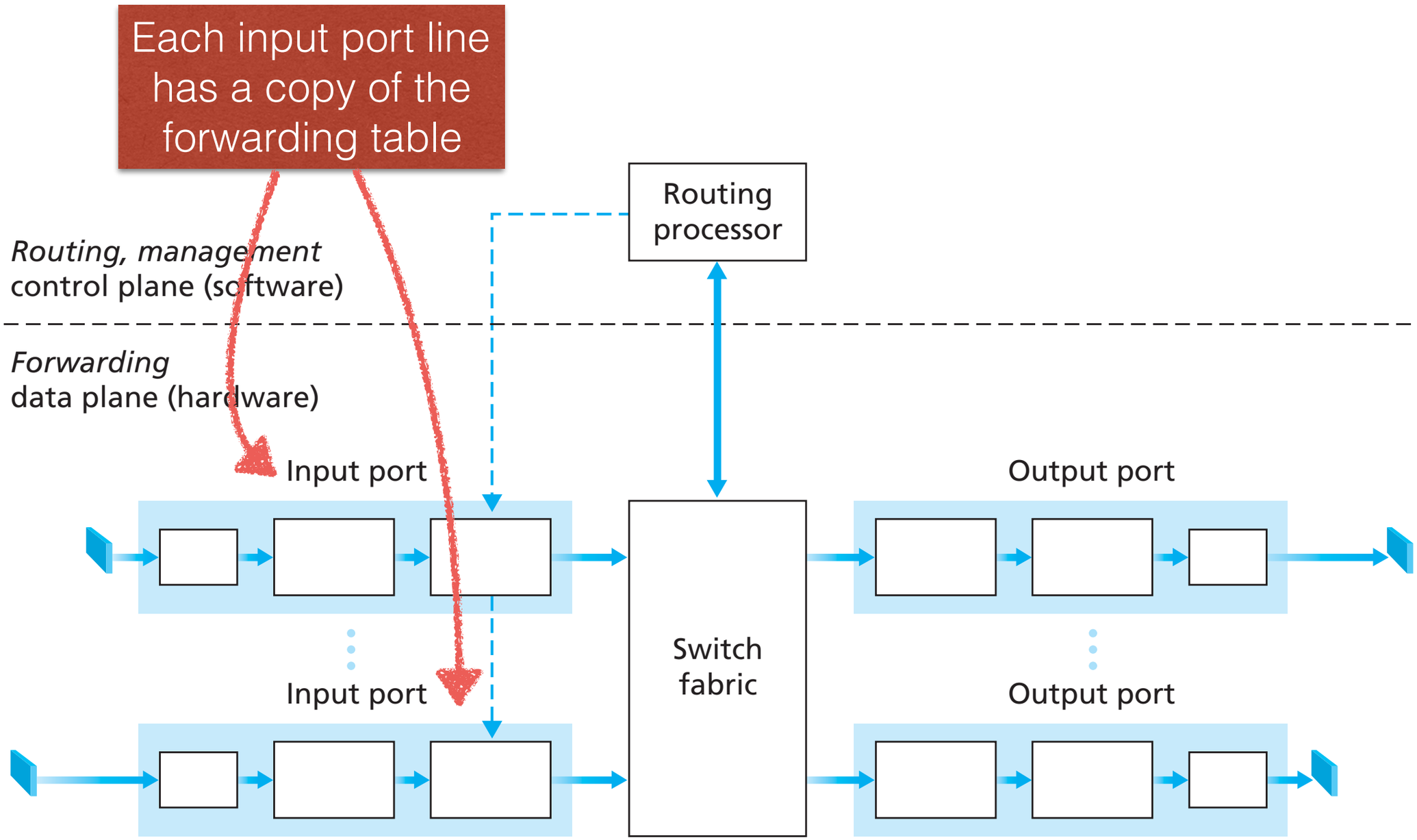

Cody Buntain: Lecture Slides for *Technologies Infrastructure and Architecture*
Licensed under the Creative Commons Attribution-NonCommercial-ShareAlike License: http://creativecommons.org/licenses/by-nc-sa/2.0/

Routers

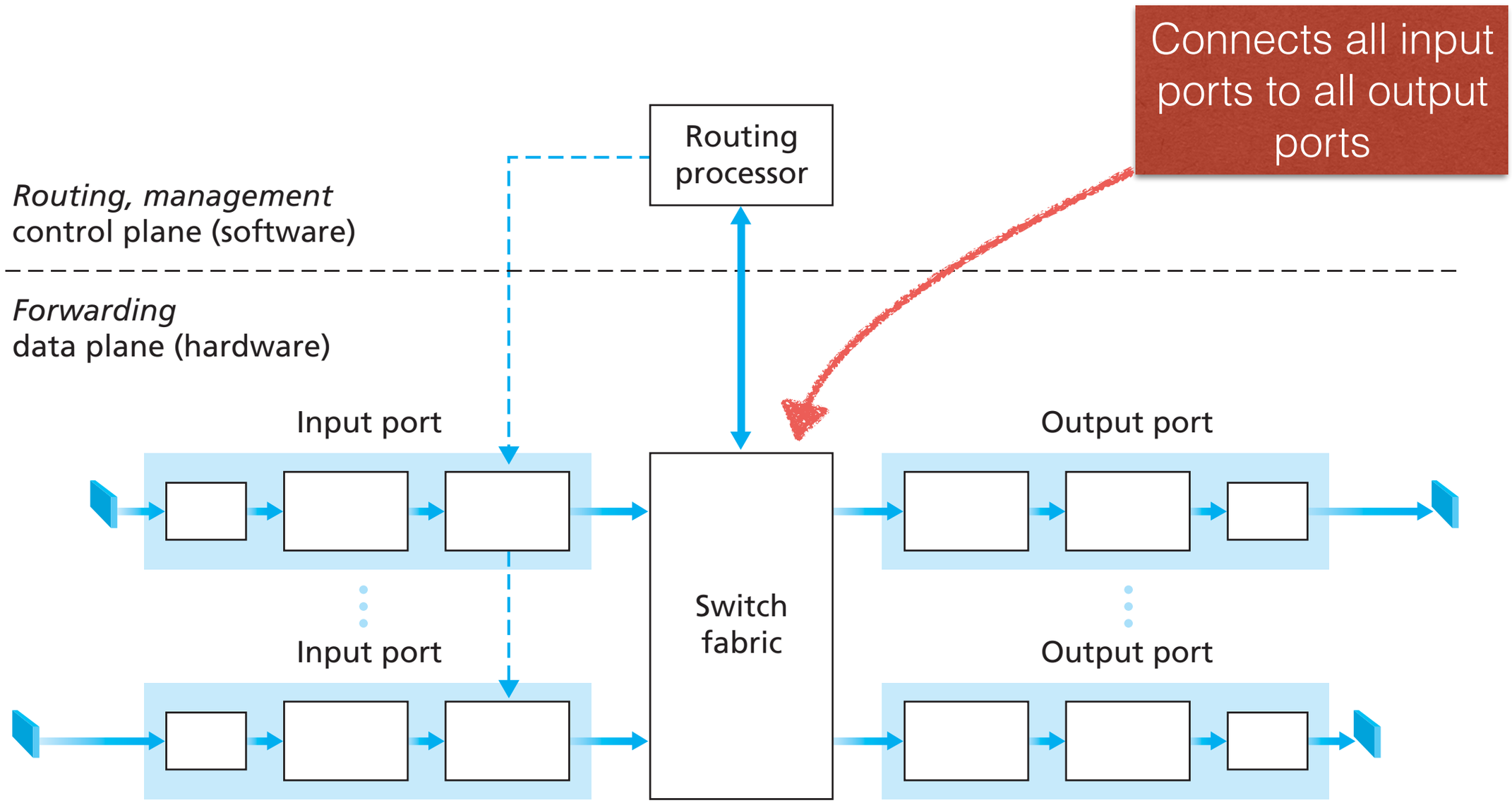

Licensed under the Creative Commons Attribution-NonCommercial-ShareAlike License: http://creativecommons.org/licenses/by-nc-sa/2.0/

Routers

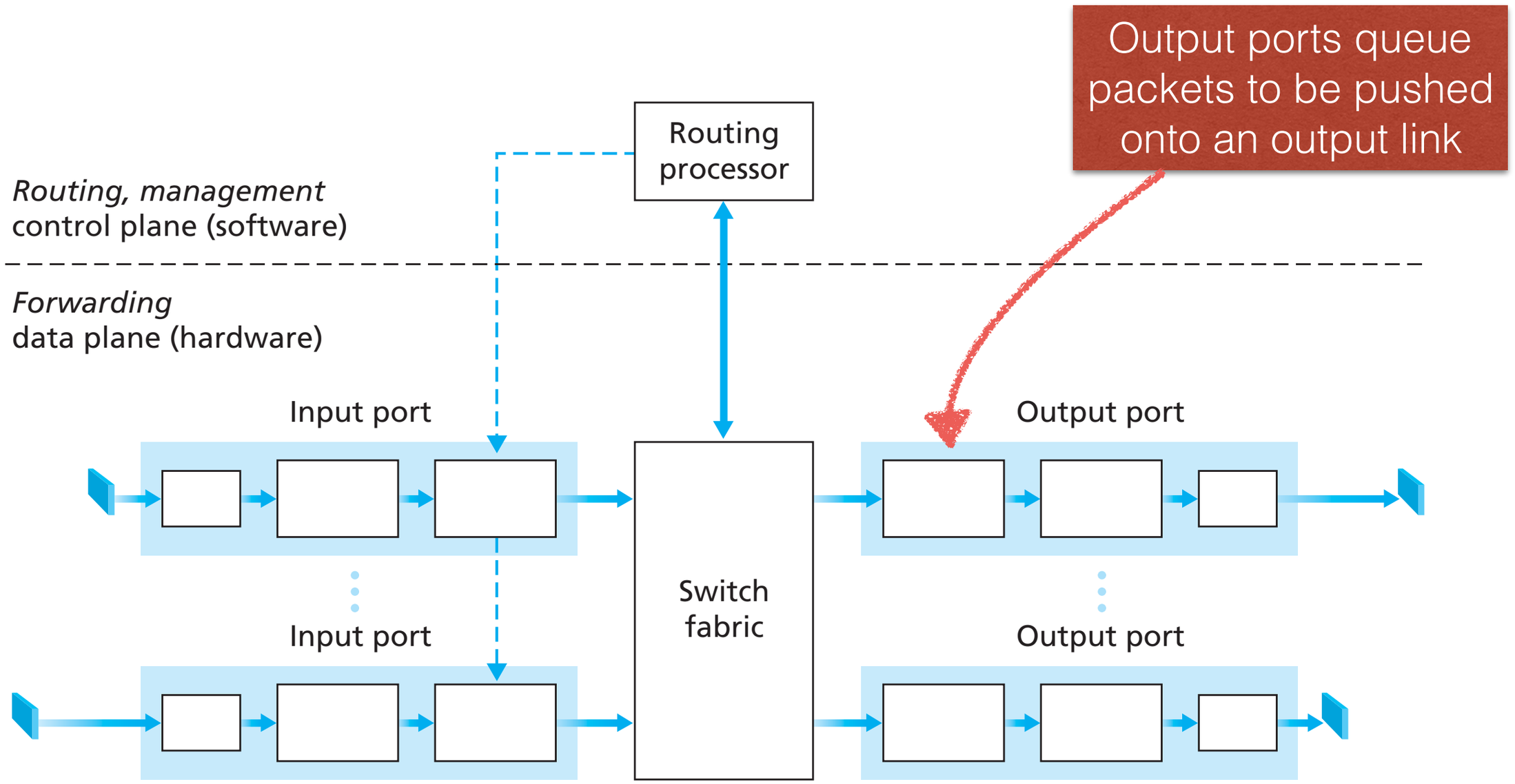

Cody Buntain: Lecture Slides for *Technologies Infrastructure and Architecture*
Licensed under the Creative Commons Attribution-NonCommercial-ShareAlike License: http://creativecommons.org/licenses/by-nc-sa/2.0/

Routers

- A little different from your typical home router
  - Your home router likely has a single output port (Internet, WAN, etc.)
  - May have several input ports
  - Simplified forwarding, but has link-layer switching

Licensed under the Creative Commons Attribution-NonCommercial-ShareAlike License: http://creativecommons.org/licenses/by-nc-sa/2.0/

Routers

- Control plane
  - Uses routing algorithms to build routing and forwarding tables
  - Typically a commodity processor and memory

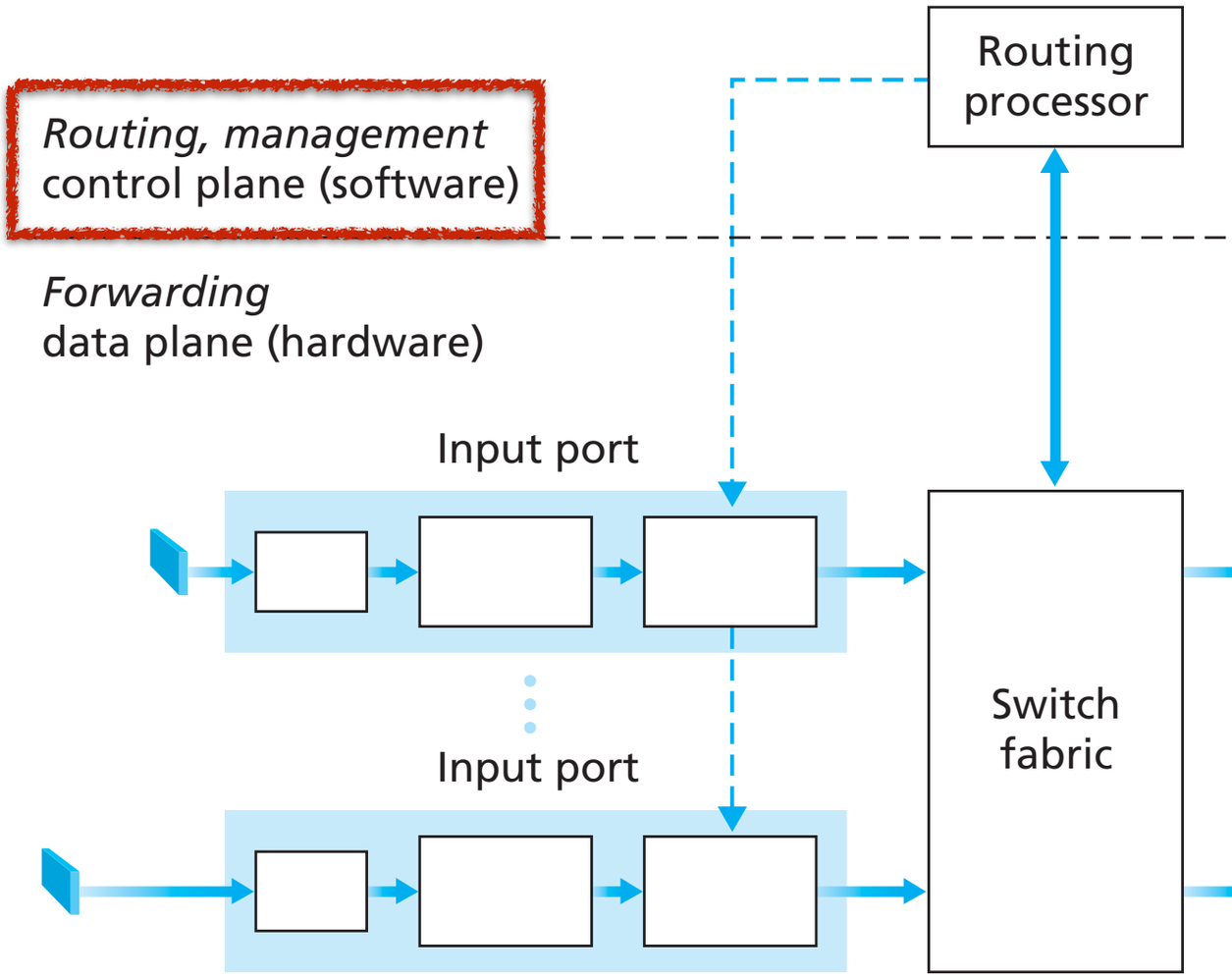

Cody Buntain: Lecture Slides for *Technologies Infrastructure and Architecture*
Licensed under the Creative Commons Attribution-NonCommercial-ShareAlike License: http://creativecommons.org/licenses/by-nc-sa/2.0/

Routers

- Data plane (input/output, switching fabric) is generally implemented in hardware
- Necessary for speed
- Software routers exist but are necessarily slower

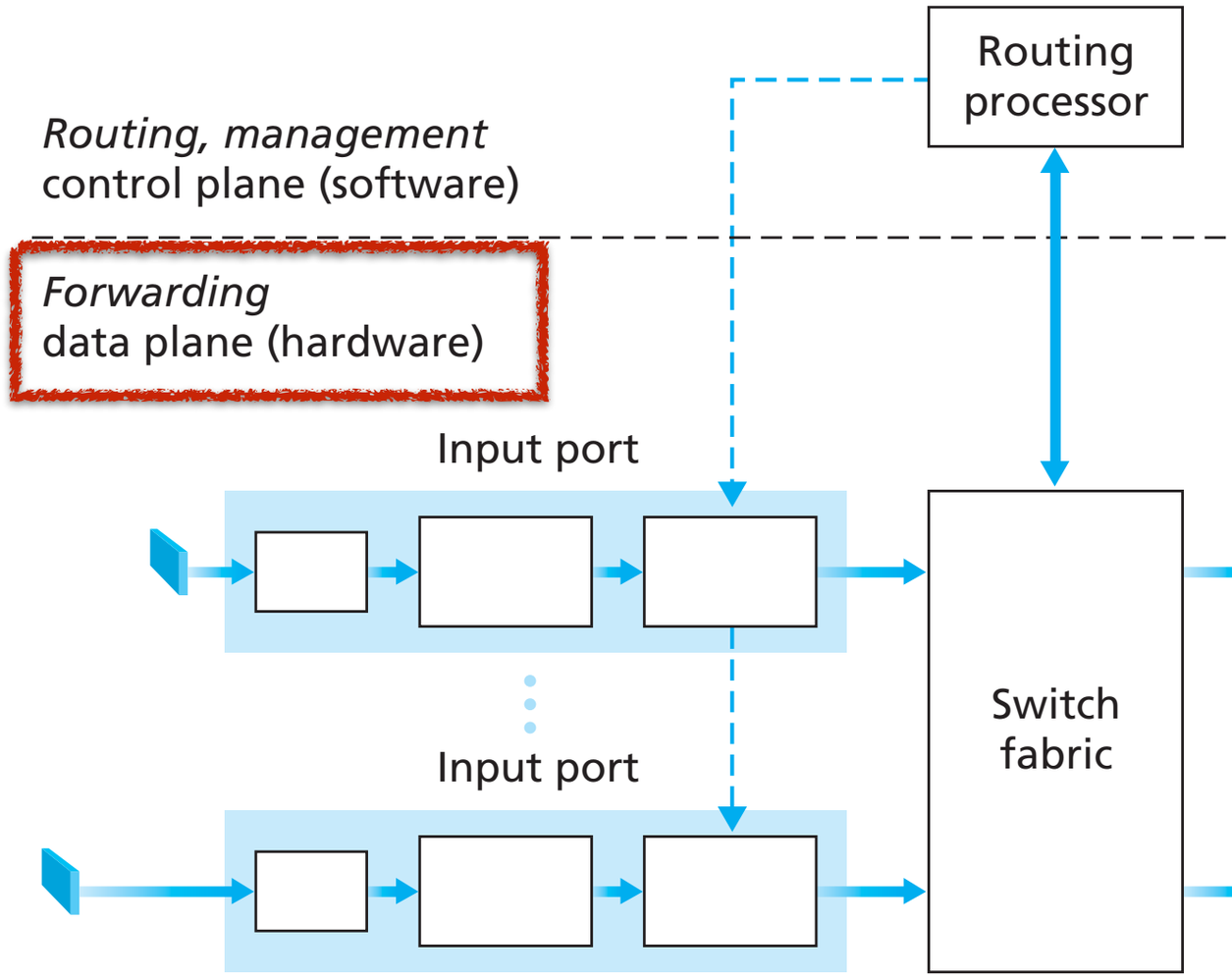

Licensed under the Creative Commons Attribution-NonCommercial-ShareAlike License: http://creativecommons.org/licenses/by-nc-sa/2.0/

Routers

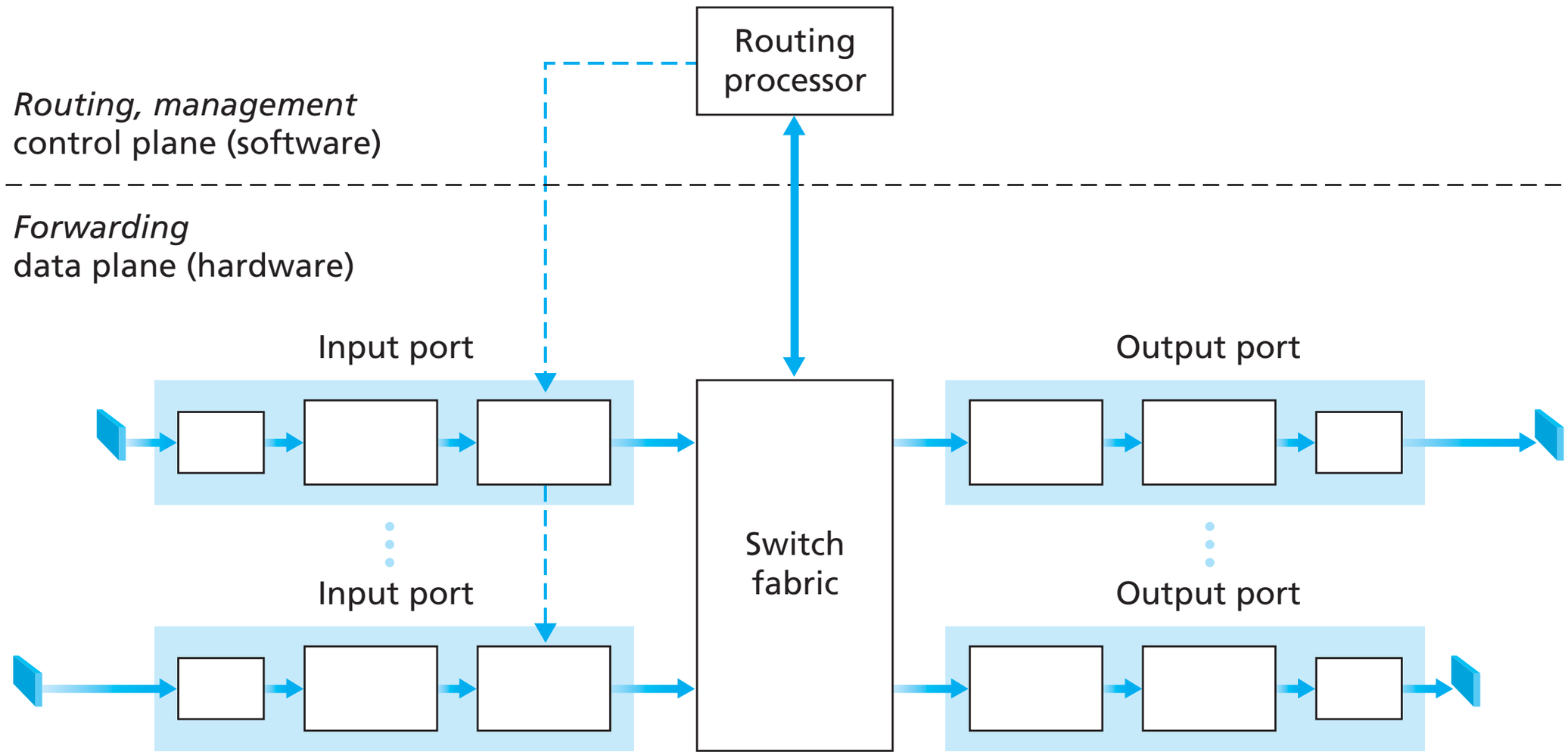

Cody Buntain: Lecture Slides for *Technologies Infrastructure and Architecture*
Licensed under the Creative Commons Attribution-NonCommercial-ShareAlike License: http://creativecommons.org/licenses/by-nc-sa/2.0/

Routers

- Data plane
  - Implemented in hardware for speed
  - Aka **forwarding plane**
- Output link selection
- Moves packets from input port to output port
  - “Port” here refers to physical port, not TCP/UDP port
- Also performs **switching** (link and network layers)

Licensed under the Creative Commons Attribution-NonCommercial-ShareAlike License: http://creativecommons.org/licenses/by-nc-sa/2.0/

Routers

- Data plane must be fast
- Imagine a 10Gbps link with constant traffic of 64-byte packets
- Each packet should be processed in ≤ 51.2 ns
    - If proc. time > 51.2 ns, packets will suffer queuing delay
    - Only ~50 ns to extract destination address, lookup output port, and send to output
- Problem is compounded by multiple ports
    - N input ports means each packet should be processed in (~50 / N) nanoseconds

Licensed under the Creative Commons Attribution-NonCommercial-ShareAlike License: http://creativecommons.org/licenses/by-nc-sa/2.0/

Routers

- Input Port
  - Terminates the physical wire/link
  - Processes packets for network and link layers
    - Includes link-layer switching, TTL, checksumming, etc.
- Search forwarding table for correct output link and send to fabric
  - “Match Plus Action,” common abstraction in network devices

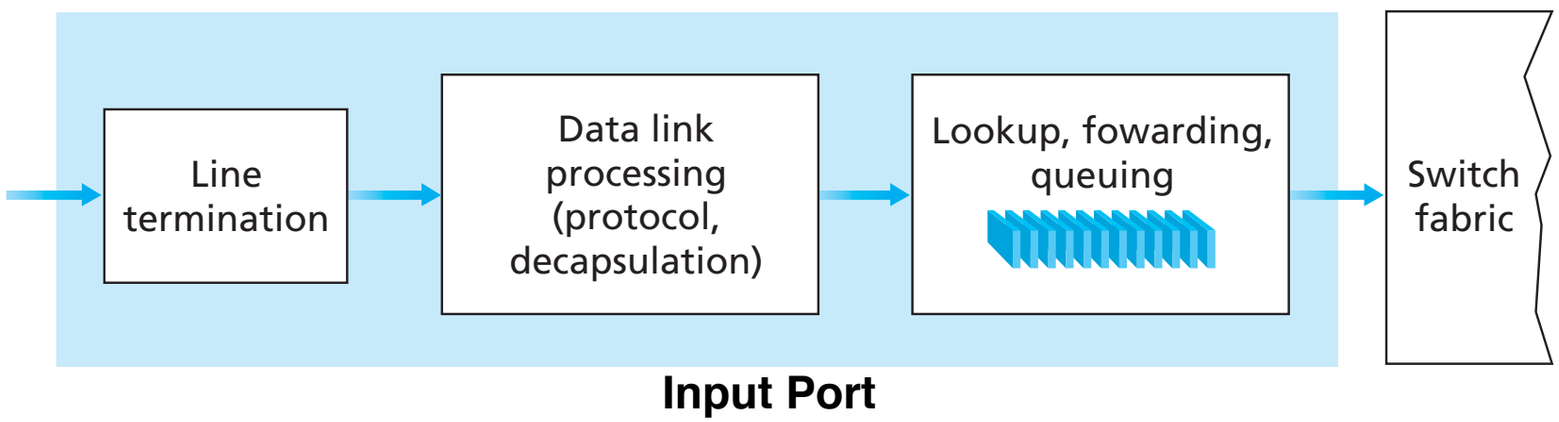

Cody Buntain: Lecture Slides for *Technologies Infrastructure and Architecture*
Licensed under the Creative Commons Attribution-NonCommercial-ShareAlike License: http://creativecommons.org/licenses/by-nc-sa/2.0/

Routers

- Searches forwarding table for correct output link
  - Each input port has a **shadow copy** of the router's forwarding table
    - Built and pushed to each input port by routing processor
- Lookup is conceptually simple (longest matching prefix) but must be done at speed
  - Whole field of high-speed lookup algorithms

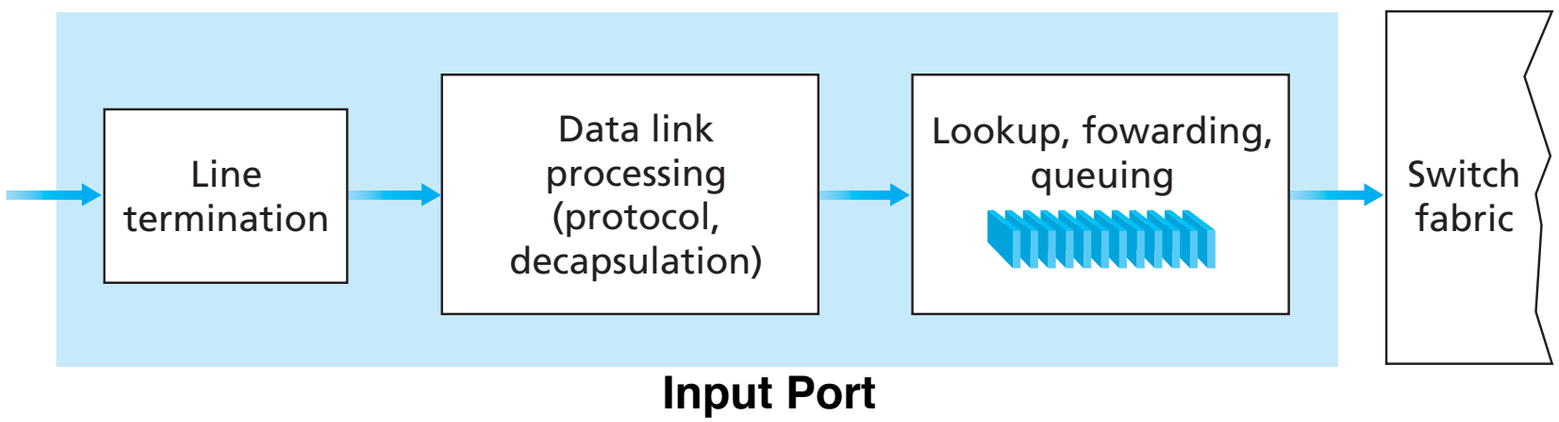

Cody Buntain: Lecture Slides for *Technologies Infrastructure and Architecture*
Licensed under the Creative Commons Attribution-NonCommercial-ShareAlike License: http://creativecommons.org/licenses/by-nc-sa/2.0/

Routers

- If all these steps plus pushing packet to switch fabric is not faster than arrival rate, hold packet in **input queue**

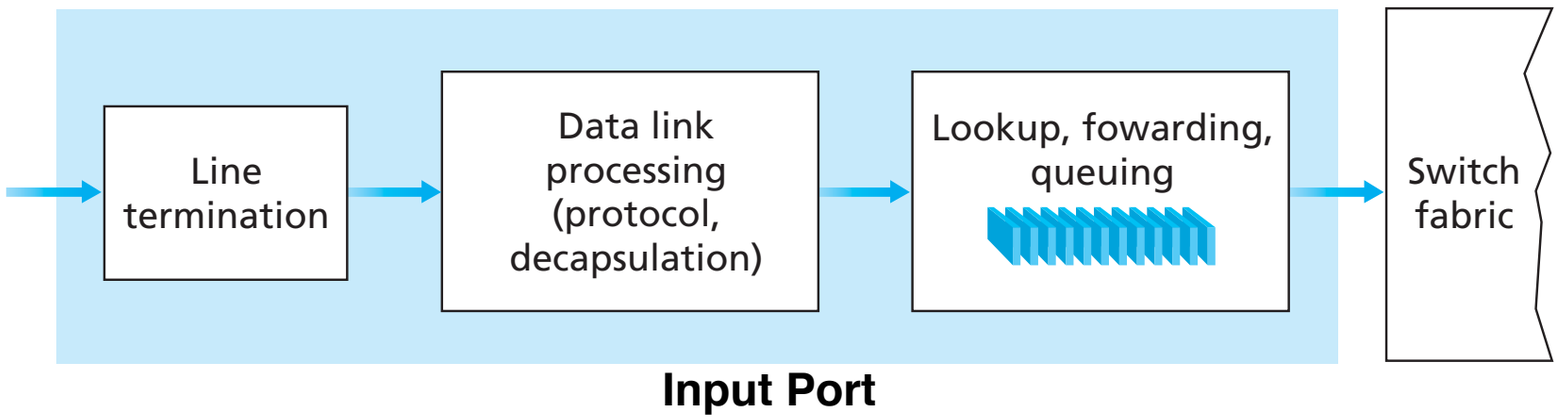

Cody Buntain: Lecture Slides for *Technologies Infrastructure and Architecture*
Licensed under the Creative Commons Attribution-NonCommercial-ShareAlike License: http://creativecommons.org/licenses/by-nc-sa/2.0/

Routers

- Switching fabric
  - Move packet from input port's buffer to output port's buffer
  - Many different ways to implement switching fabric
    - Speed is important though
  - Want **switching rate** ≥ # of ports times arrival rate
    - Otherwise, packets have to delay in input queue before they can be sent to output

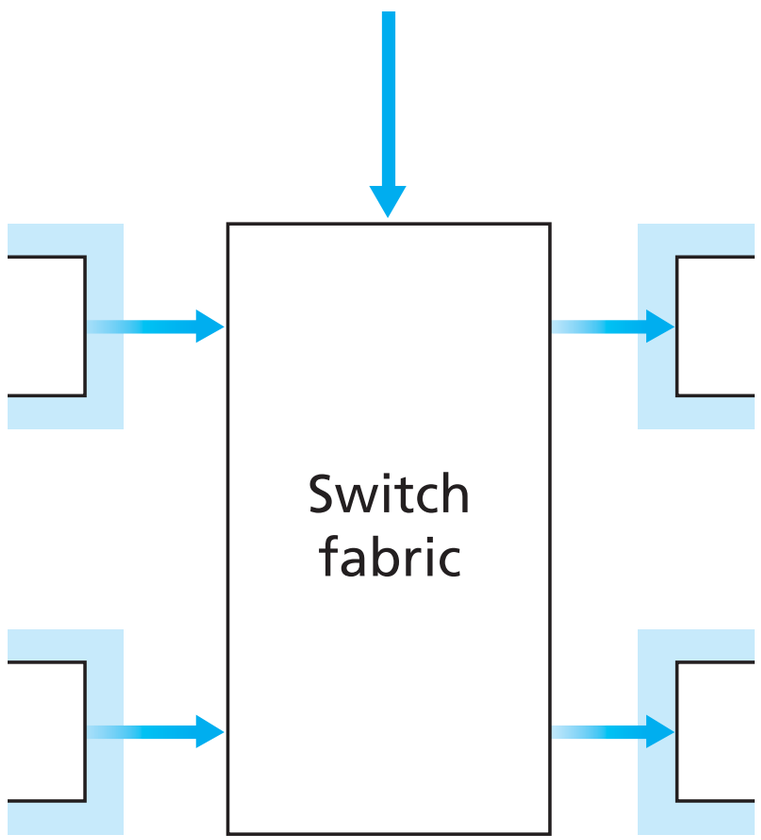

Licensed under the Creative Commons Attribution-NonCommercial-ShareAlike License: http://creativecommons.org/licenses/by-nc-sa/2.0/

Routers

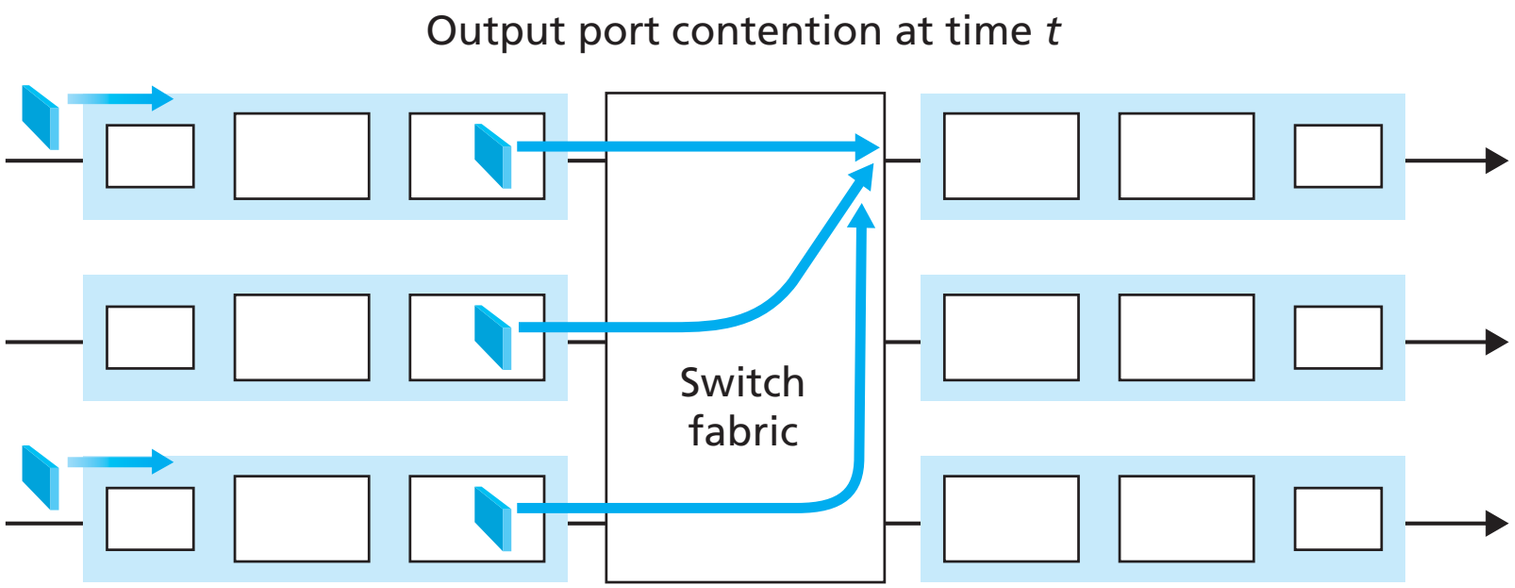

Licensed under the Creative Commons Attribution-NonCommercial-ShareAlike License: http://creativecommons.org/licenses/by-nc-sa/2.0/

Routers

- Considerations in switch fabric
  - Speed - how fast can it move packets
  - Cost - how expensive is the hardware
  - Flexibility - can it move packets between multiple pairs of input/output ports simultaneously?

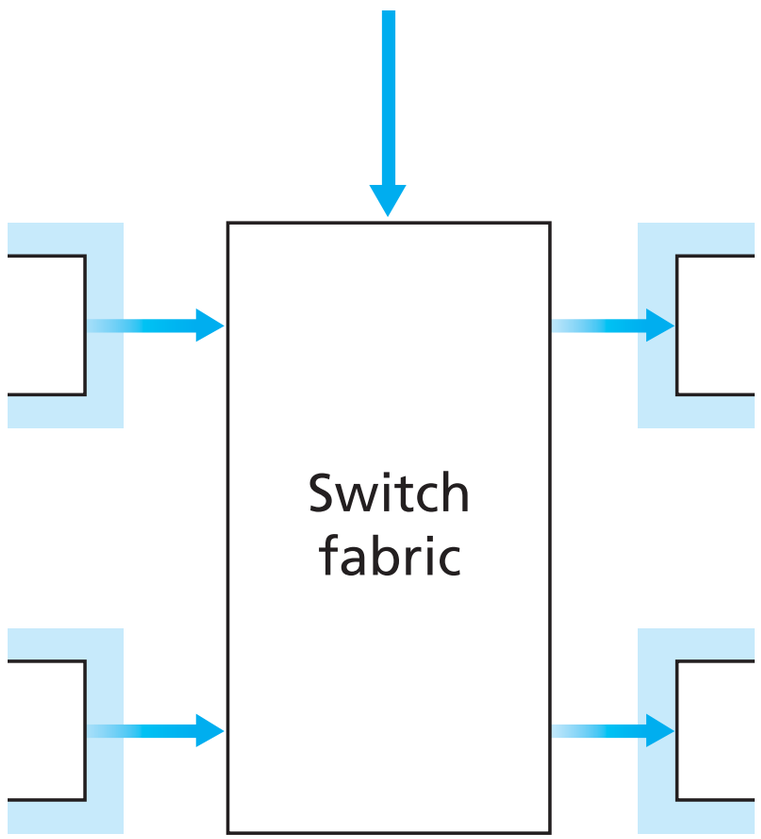

Licensed under the Creative Commons Attribution-NonCommercial-ShareAlike License: http://creativecommons.org/licenses/by-nc-sa/2.0/

Routers

- Three common types of fabric:

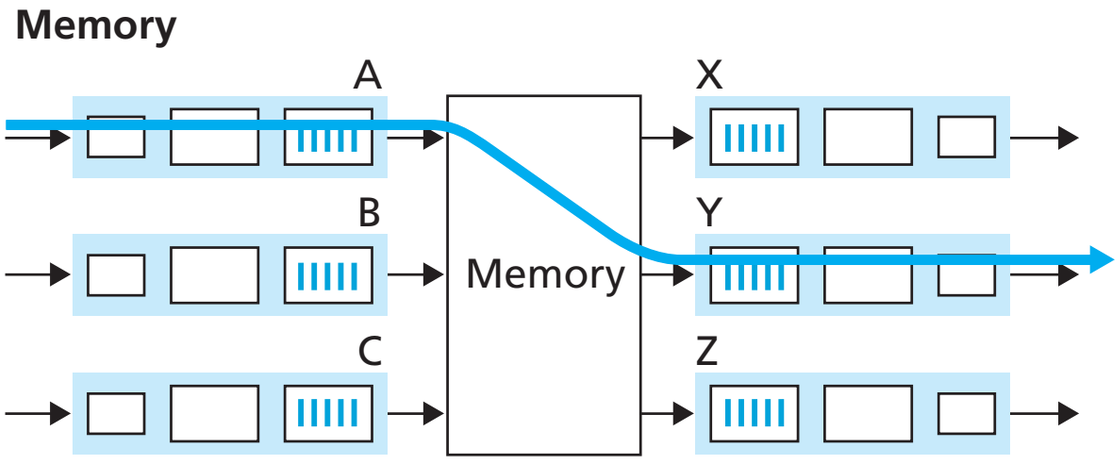

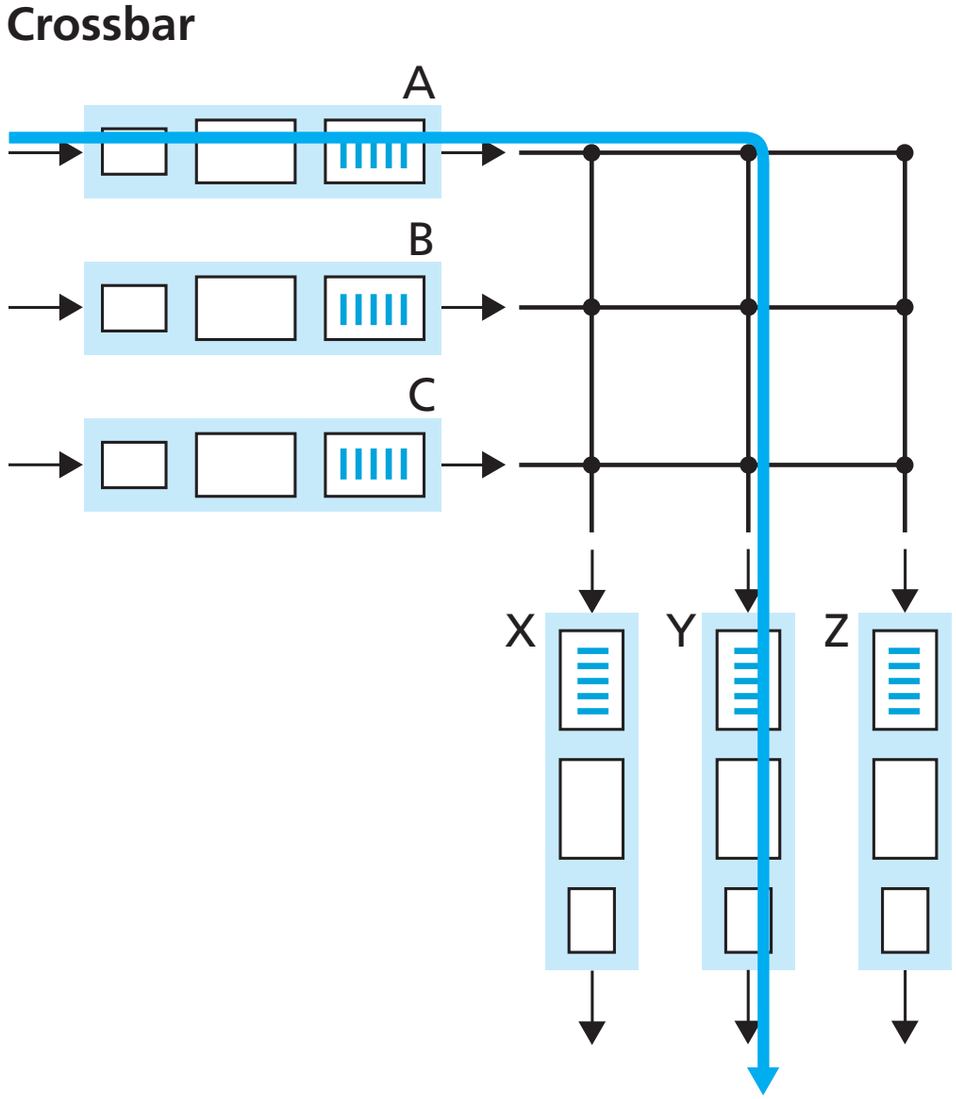

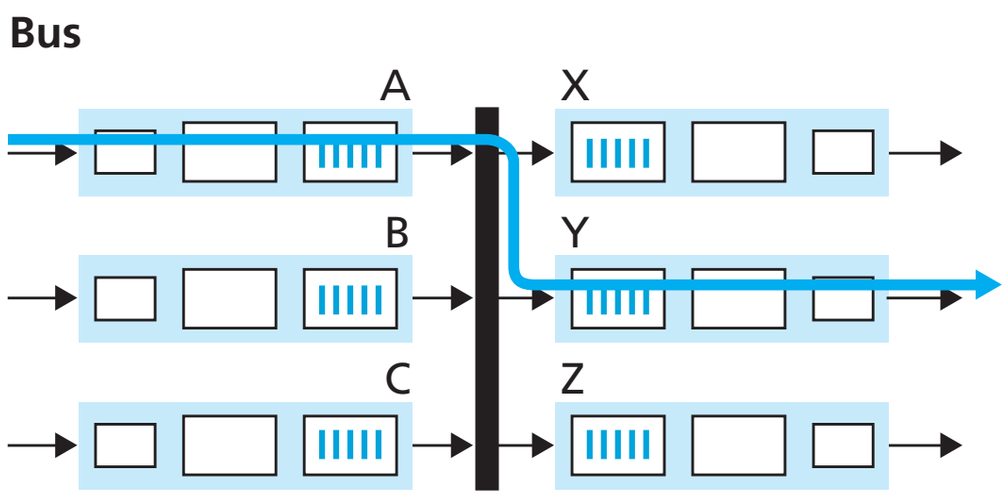

Licensed under the Creative Commons Attribution-NonCommercial-ShareAlike License: http://creativecommons.org/licenses/by-nc-sa/2.0/

Routers

- Memory-based fabric
  - Early routers were built this way
  - Typical computer might forward packets this way
  - Read packet from input port, store in memory, process packet, then send to output port

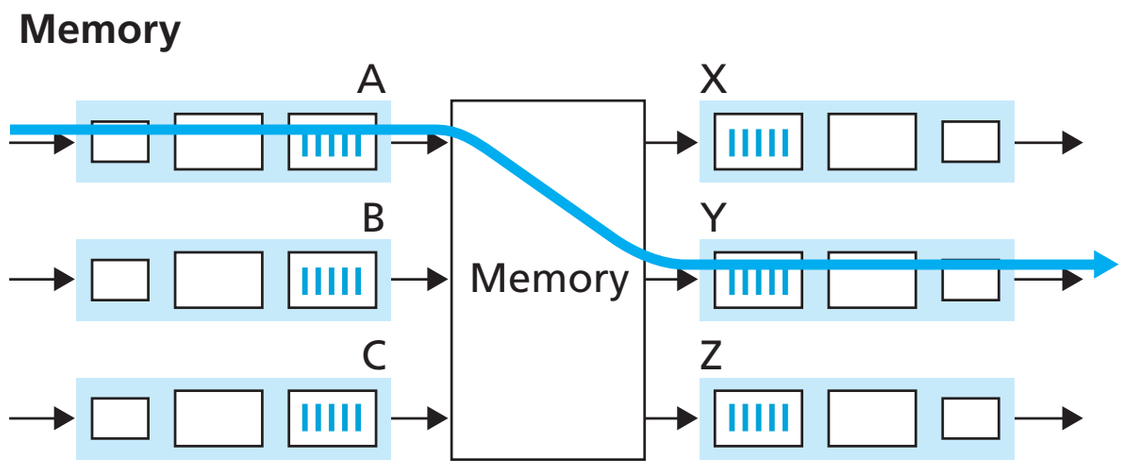

Cody Buntain: Lecture Slides for *Technologies Infrastructure and Architecture*
Licensed under the Creative Commons Attribution-NonCommercial-ShareAlike License: http://creativecommons.org/licenses/by-nc-sa/2.0/

Routers

- Memory-based fabric (cont.)
  - With a single processor, network throughput is limited to B/2 where B is the memory's throughput (1/2 for reading, 1/2 for writing)
  - Routers with very fast (i.e., expensive) memory and multiple processors can perform very well

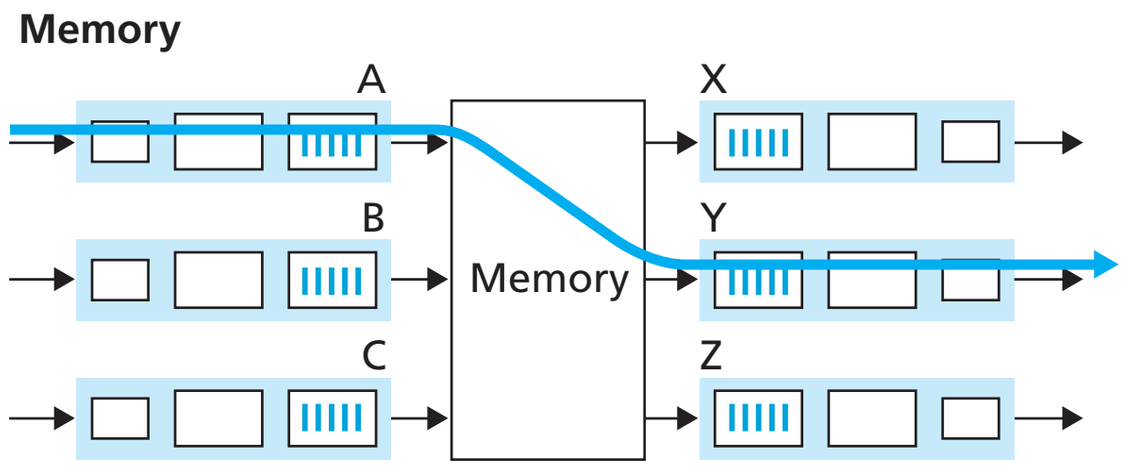

Licensed under the Creative Commons Attribution-NonCommercial-ShareAlike License: http://creativecommons.org/licenses/by-nc-sa/2.0/

Routers

- Bus fabric
  - Dedicated bus shared between all input ports
  - Can write to all output port queues
  - Network throughput is limited by bus bandwidth

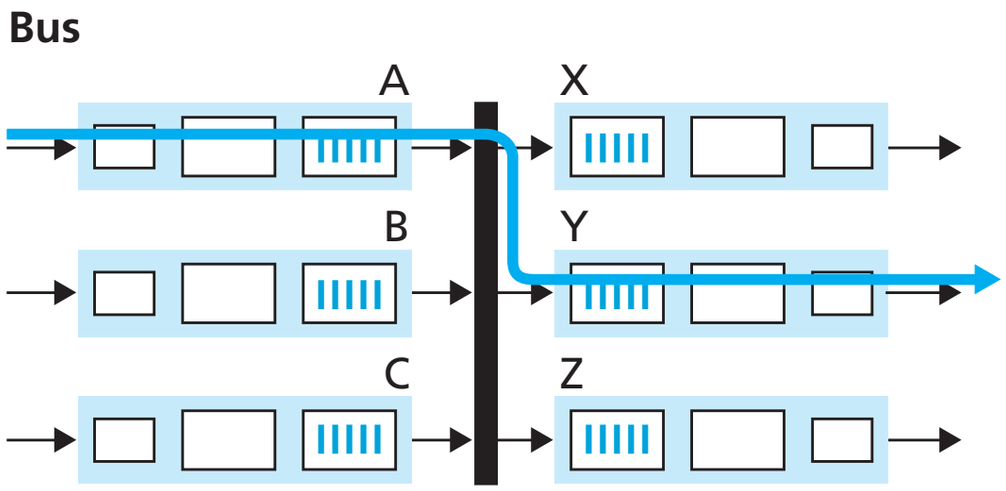

Licensed under the Creative Commons Attribution-NonCommercial-ShareAlike License: http://creativecommons.org/licenses/by-nc-sa/2.0/

Routers

- Bus fabric
  - Serial transfer - only one input can use bus at a time
  - All other input port queues are blocked until bus is free
  - Called “bus contention”

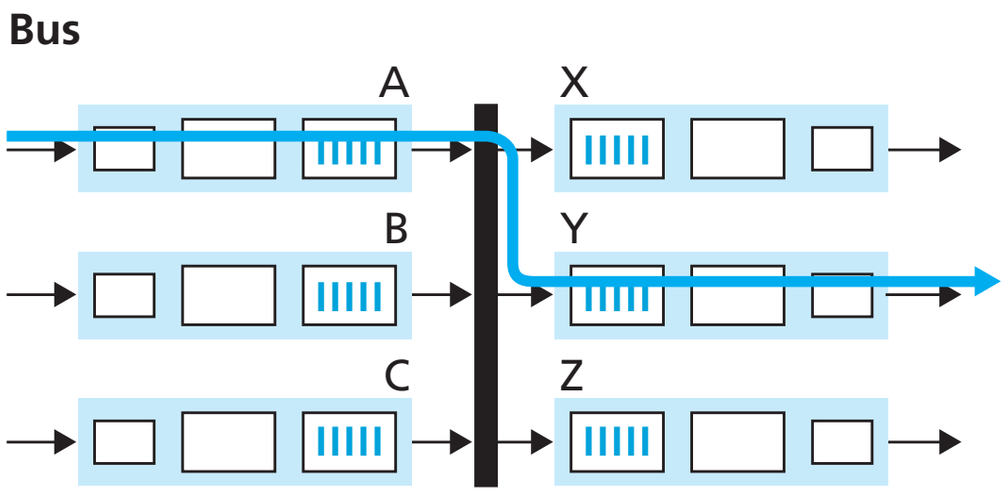

Cody Buntain: Lecture Slides for *Technologies Infrastructure and Architecture*
Licensed under the Creative Commons Attribution-NonCommercial-ShareAlike License: http://creativecommons.org/licenses/by-nc-sa/2.0/

Routers

- Crossbar fabric
  - Given N input ports and N ports, use 2N buses
  - N^2 interconnects, one between each pair of input/output ports
  - Does not block independent input/output transfer
    - As long as input/output ports are mutually exclusive
  - I.e., supports **parallel** transfers

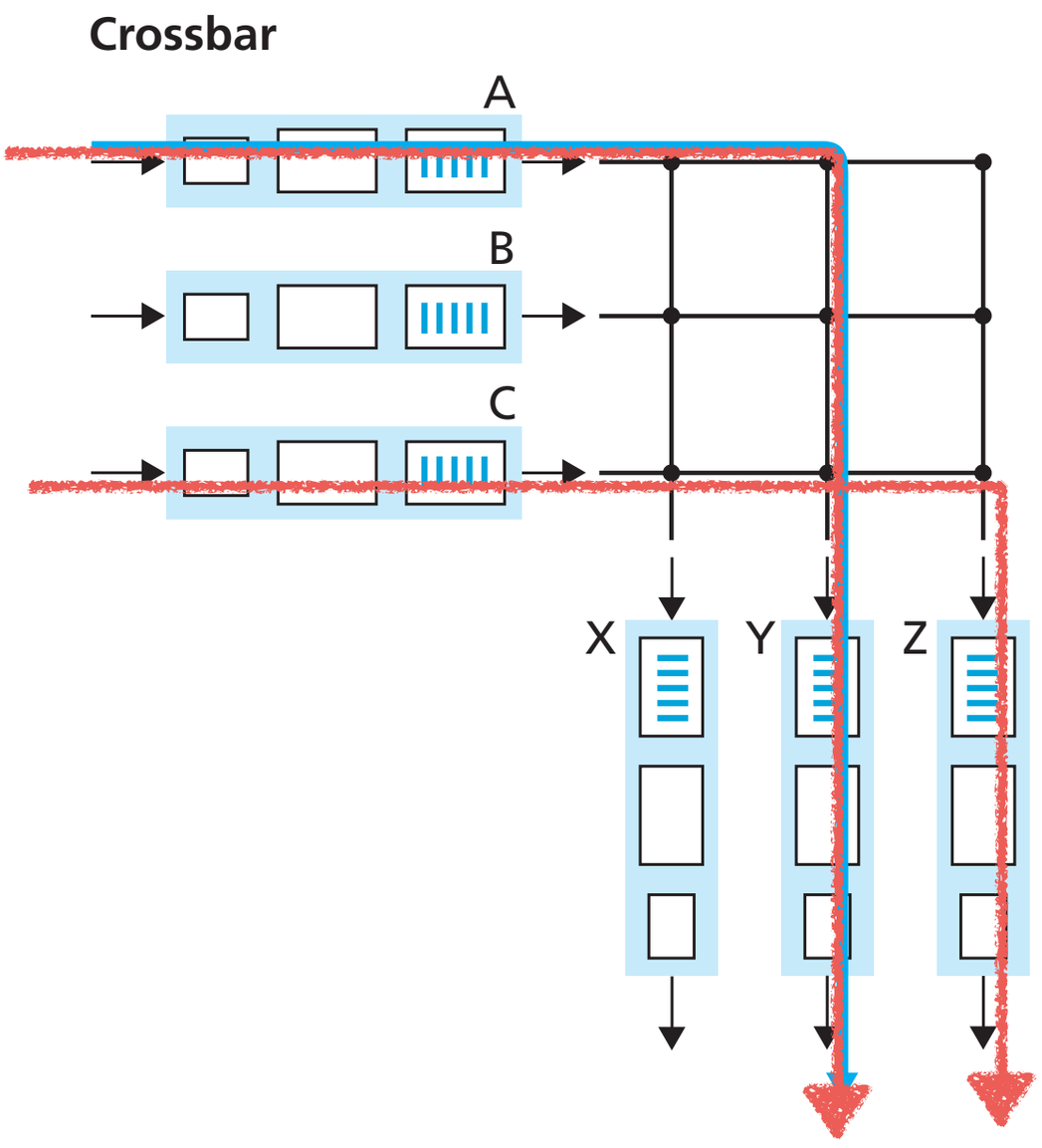

Cody Buntain: Lecture Slides for *Technologies Infrastructure and Architecture*
Licensed under the Creative Commons Attribution-NonCommercial-ShareAlike License: http://creativecommons.org/licenses/by-nc-sa/2.0/

Routers

- Once data comes off the switch fabric, it is placed in the output port's queue
- Network-layer datagrams are encapsulated in link-layer frames and pushed onto the wire at "line speed"
- Note: switch fabric rate is >> output rate, so output queue can overflow and drop packets

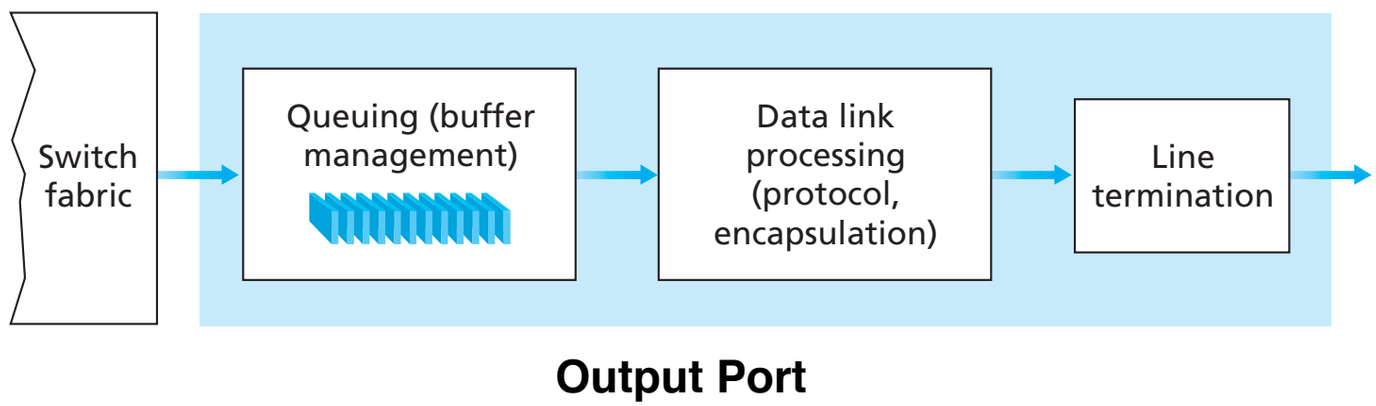

Cody Buntain: Lecture Slides for *Technologies Infrastructure and Architecture*
Licensed under the Creative Commons Attribution-NonCommercial-ShareAlike License: http://creativecommons.org/licenses/by-nc-sa/2.0/

Routers

- Queuing delay in routers
  - Input queue
    - High packet arrival rate
    - Long forwarding lookups
    - Bus contention
  - Output queue
    - Fabric rate >> output rate

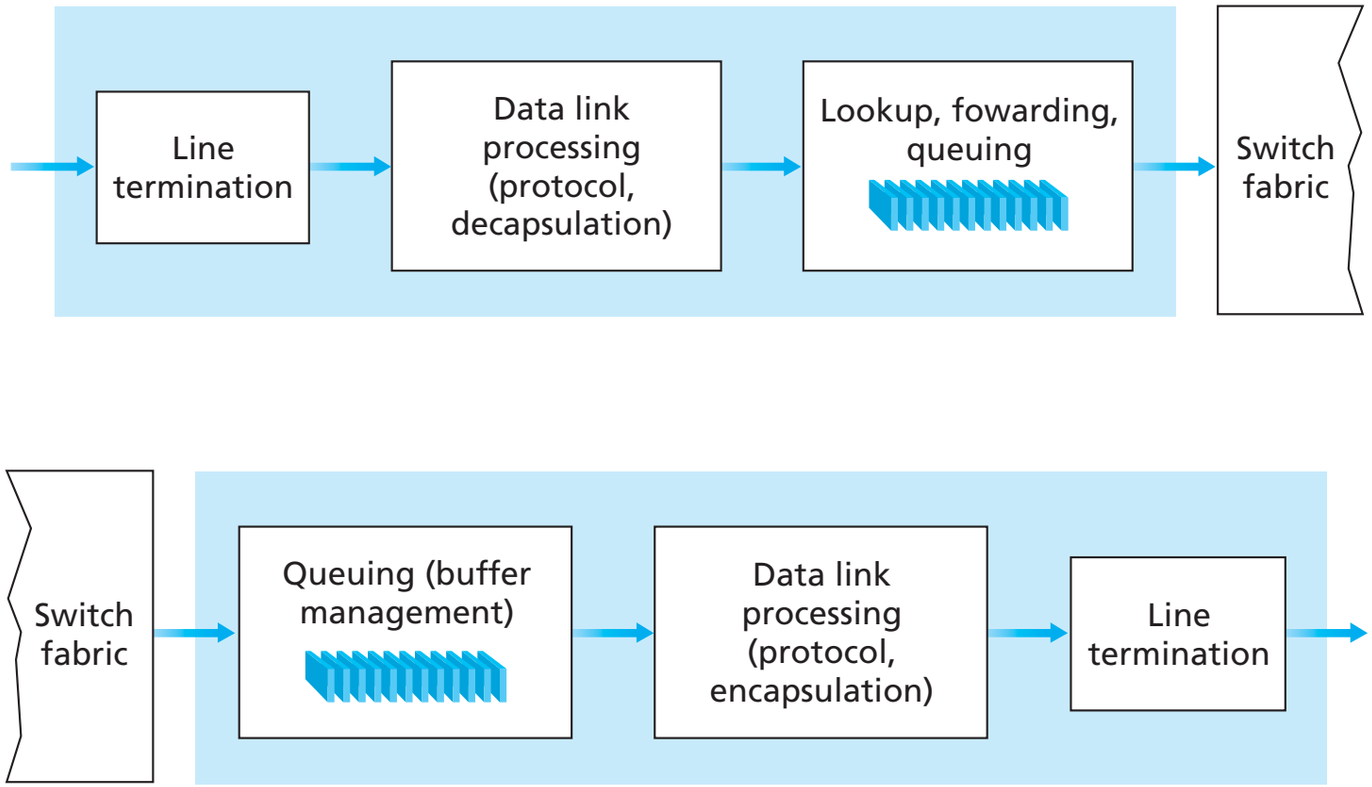

Licensed under the Creative Commons Attribution-NonCommercial-ShareAlike License: http://creativecommons.org/licenses/by-nc-sa/2.0/

Routers

- The primary source of congestion in the network
  - Queuing delay!!!

Cody Buntain: Lecture Slides for *Technologies Infrastructure and Architecture*
Licensed under the Creative Commons Attribution-NonCommercial-ShareAlike License: http://creativecommons.org/licenses/by-nc-sa/2.0/

Queuing in Routers

- Queuing occurs on **both** the input line and output line
  - Input line queues before sending to switching fabric
    - Forwarding on to switch fabric might be slower than N x R input
  - Output queues if incoming data arrives faster than output R

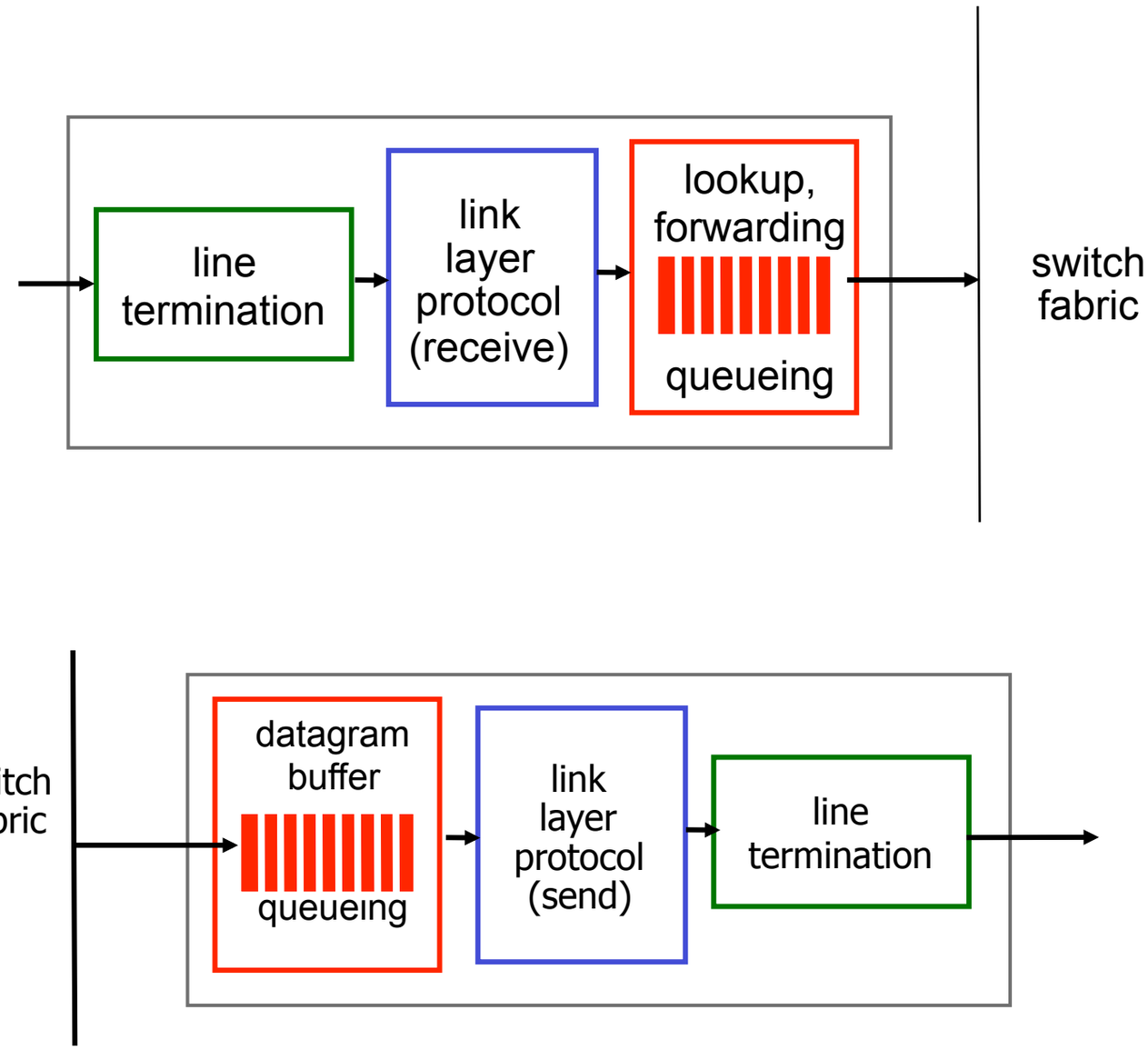

Cody Buntain: Lecture Slides for *Technologies Infrastructure and Architecture*
Licensed under the Creative Commons Attribution-NonCommercial-ShareAlike License: http://creativecommons.org/licenses/by-nc-sa/2.0/

Routers

- Open questions:
  - When buffers are full, do we drop a new packet or an old packet?
  - When transferring packets across switch fabric, from which input ports do we take from first?
- Answer these questions with **packet scheduling** algorithms
  - A form of quality of service (QoS)

Licensed under the Creative Commons Attribution-NonCommercial-ShareAlike License: http://creativecommons.org/licenses/by-nc-sa/2.0/

Routers

- Scheduling and dropping packets
  - New packet arrives, and buffers are full
  - What can we do?
    - We can drop the new packet (called **drop-tail**)
    - Or we can drop a packet that's been sitting in the queue for a while
- Most systems drop the new packet

Licensed under the Creative Commons Attribution-NonCommercial-ShareAlike License: http://creativecommons.org/licenses/by-nc-sa/2.0/

Routers

- Other approaches to dropping packets
  - Routers can be proactive about avoiding congestion
    - Called **A**ctive **Q**ueue **M**anagement (AQM)
    - One AQM algorithm is **R**andom **E**arly **D**etection
      - Drop packets with probability proportional to likelihood of causing delay

Licensed under the Creative Commons Attribution-NonCommercial-ShareAlike License: http://creativecommons.org/licenses/by-nc-sa/2.0/

Routers

- Which input ports do we take from first when switching?
  - Fairly across all ports?
  - Longest queue?
  - Most diverse queue?
- Important issue:
  - Head-of-line (HOL) blocking can cause delay if one output port is much more popular than others

Key:

destined for upper output port

destined for middle output port

destined for lower output port

Licensed under the Creative Commons Attribution-NonCommercial-ShareAlike License: http://creativecommons.org/licenses/by-nc-sa/2.0/

Routers

- Other packet scheduling mechanisms:
  - Determine packet priority
    - IPv4 “Type of Service”/IPv6 flow fields
      - Give specific addresses (e.g., servers) higher priority
  - Maintain different queues for each priority level
    - Drop lower priority packets first
  - Network neutrality implications?

Licensed under the Creative Commons Attribution-NonCommercial-ShareAlike License: http://creativecommons.org/licenses/by-nc-sa/2.0/

Questions about the data plane?

Licensed under the Creative Commons Attribution-NonCommercial-ShareAlike License: http://creativecommons.org/licenses/by-nc-sa/2.0/

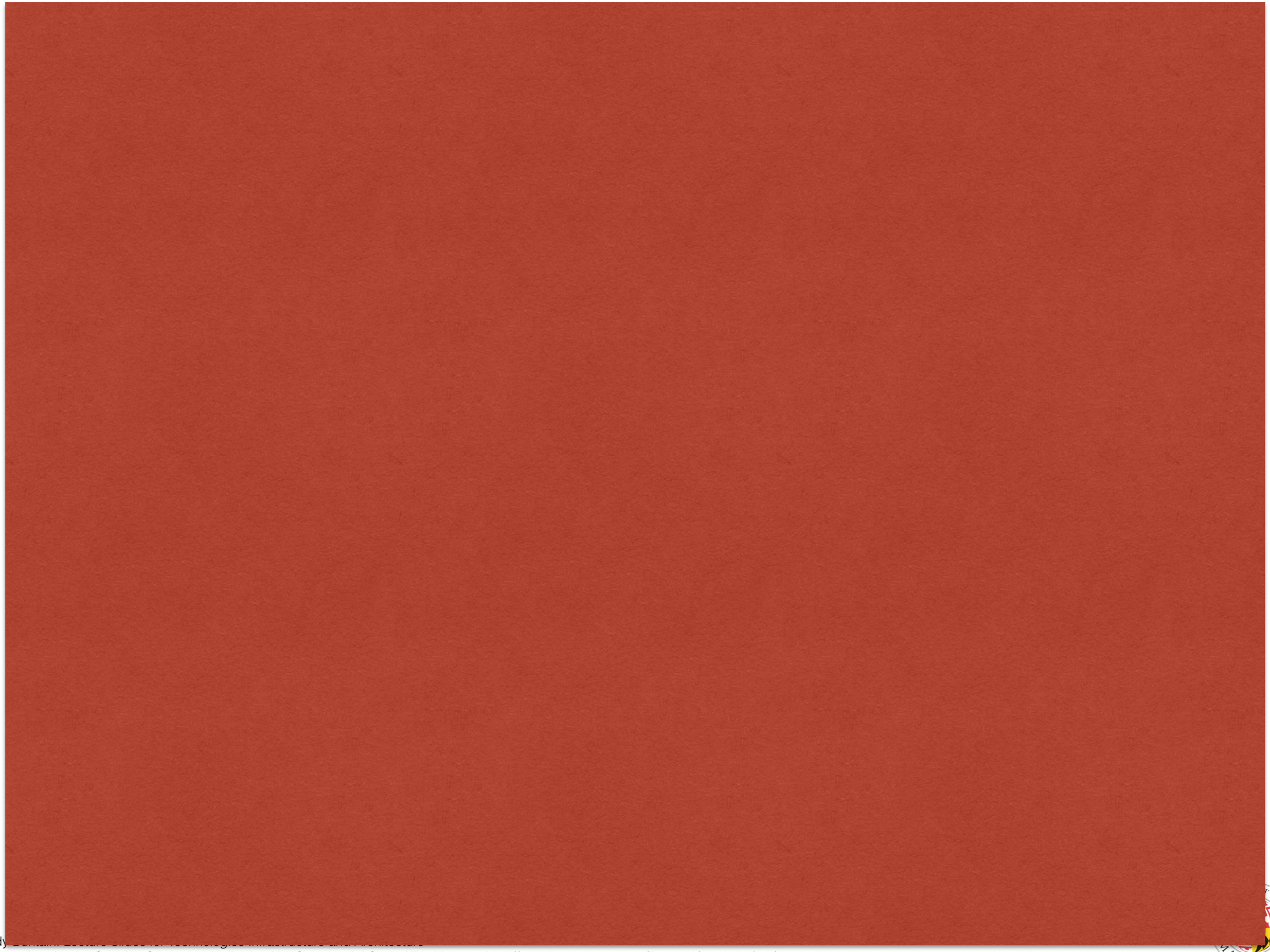

Licensed under the Creative Commons Attribution-NonCommercial-ShareAlike License: http://creativecommons.org/licenses/by-nc-sa/2.0/

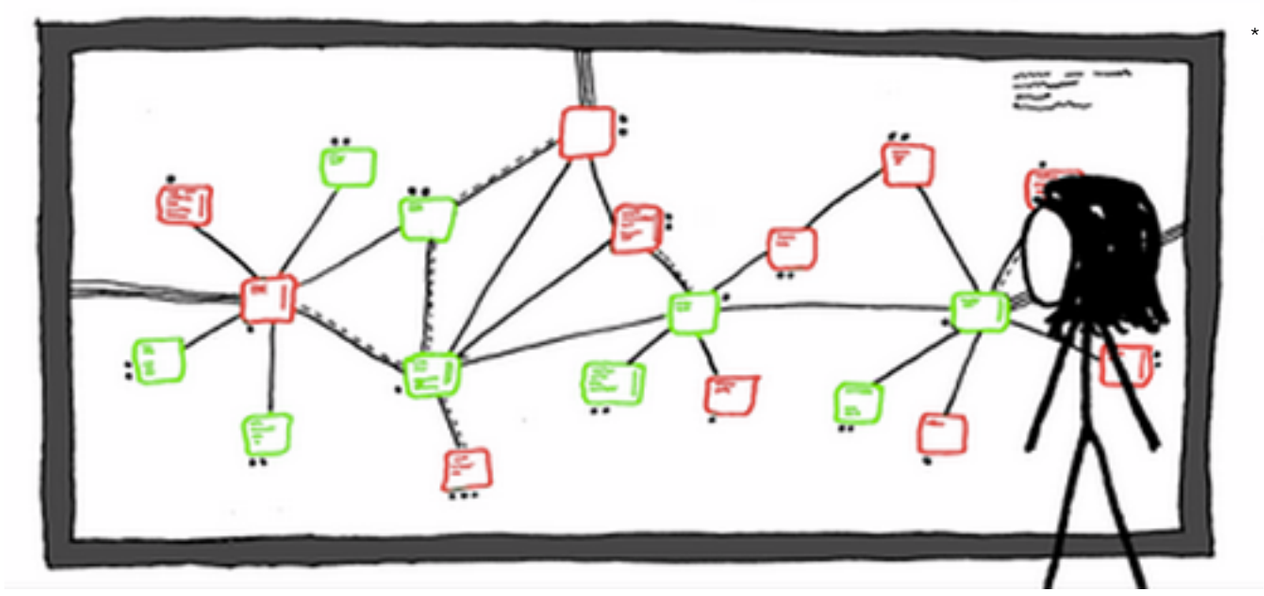

*

The Network Layer

INST346

Cody Buntain: Lecture Slides for *Technologies Infrastructure and Architecture*
Licensed under the Creative Commons Attribution-NonCommercial-ShareAlike License: http://creativecommons.org/licenses/by-nc-sa/2.0/

*Image from Randall Munroe's
https://xkcd.com/350/

Today's Agenda

- Lab 3 due before class today
  - just kidding
- HW4 assigned today
- Routers, Net Neutrality, and the Internet Protocol

Licensed under the Creative Commons Attribution-NonCommercial-ShareAlike License: http://creativecommons.org/licenses/by-nc-sa/2.0/

Routers

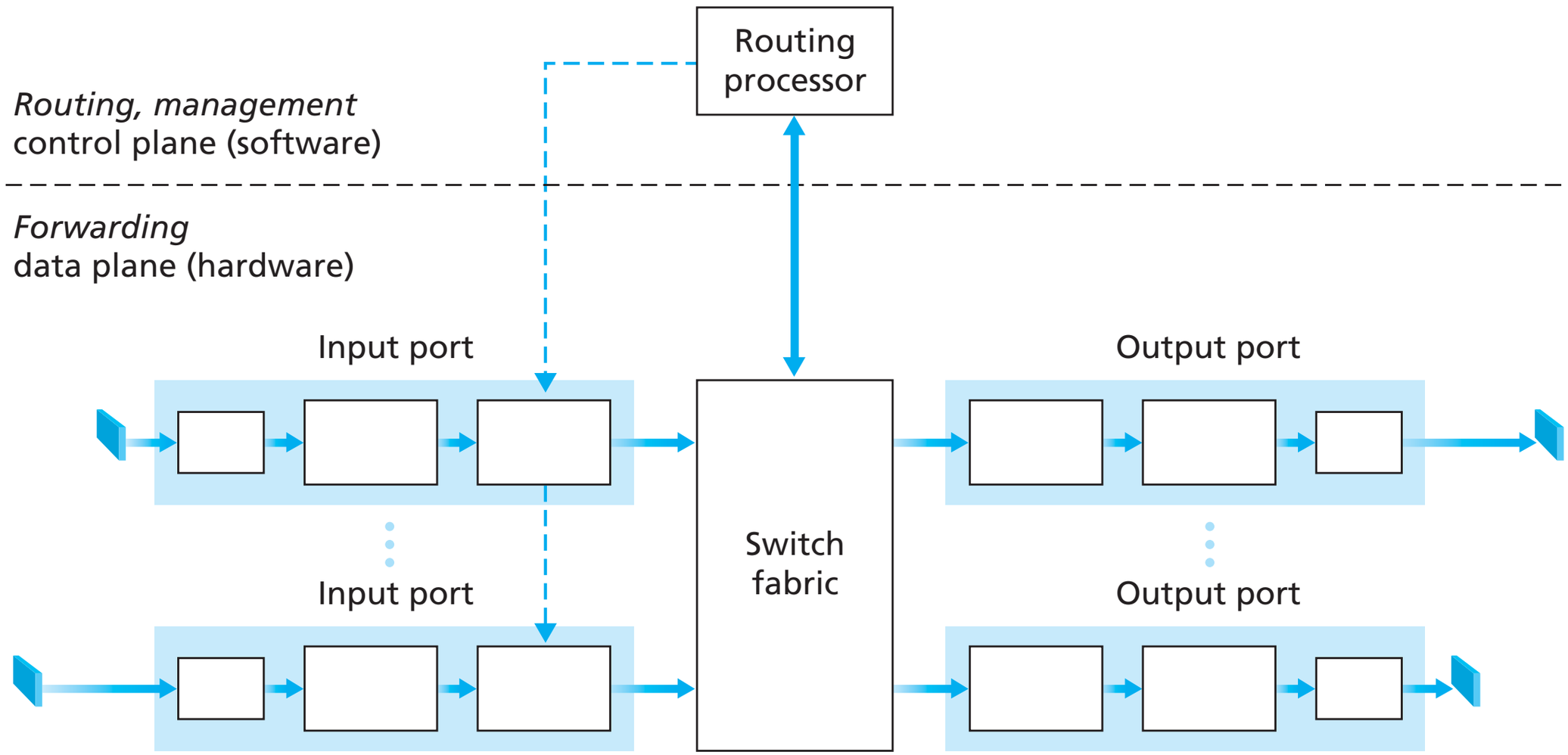

Cody Buntain: Lecture Slides for *Technologies Infrastructure and Architecture*
Licensed under the Creative Commons Attribution-NonCommercial-ShareAlike License: http://creativecommons.org/licenses/by-nc-sa/2.0/

Routers

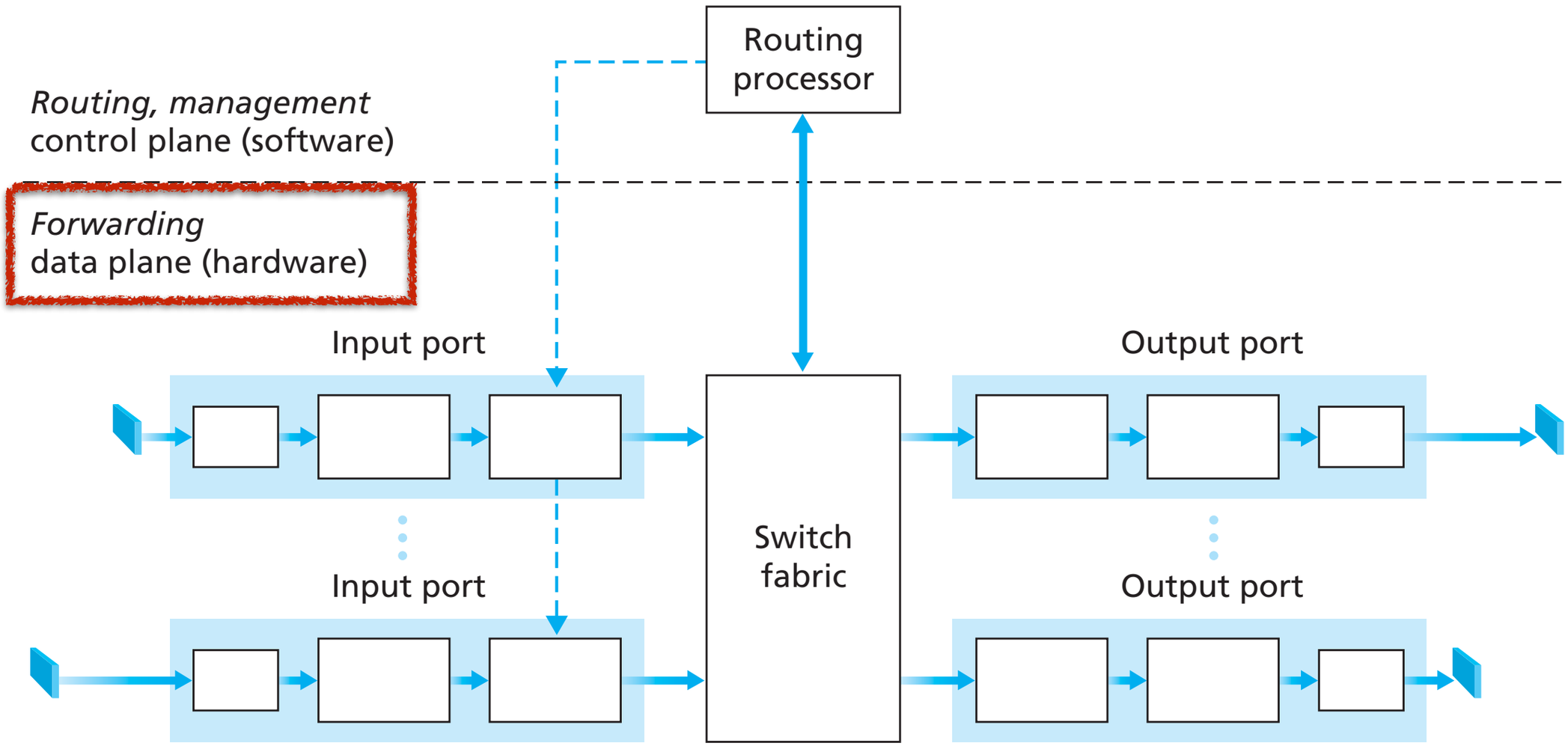

Cody Buntain: Lecture Slides for *Technologies Infrastructure and Architecture*
Licensed under the Creative Commons Attribution-NonCommercial-ShareAlike License: http://creativecommons.org/licenses/by-nc-sa/2.0/

Routers

Packets are accepted and queued on input ports

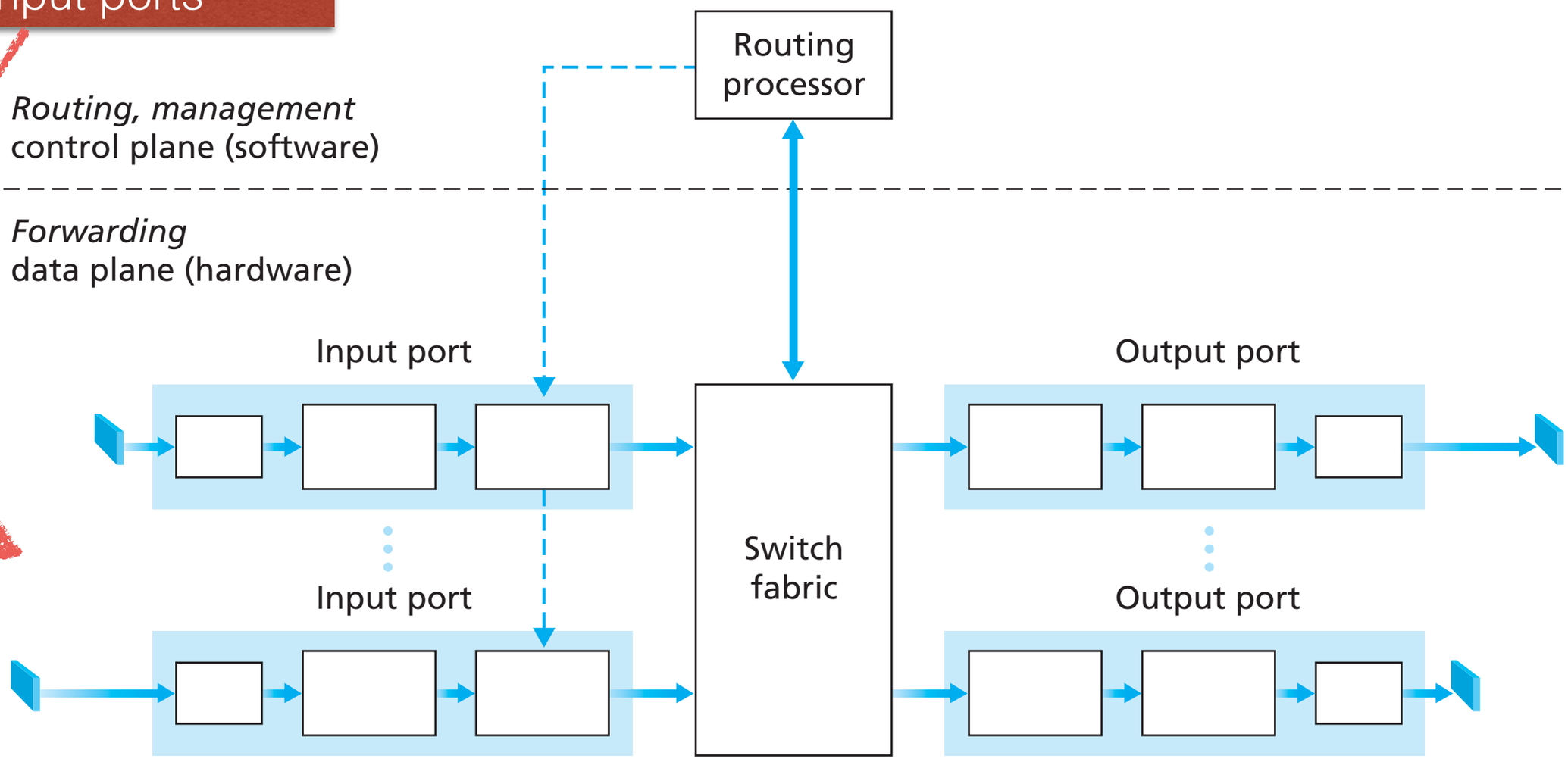

Cody Buntain: Lecture Slides for *Technologies Infrastructure and Architecture*
Licensed under the Creative Commons Attribution-NonCommercial-ShareAlike License: http://creativecommons.org/licenses/by-nc-sa/2.0/

Routers

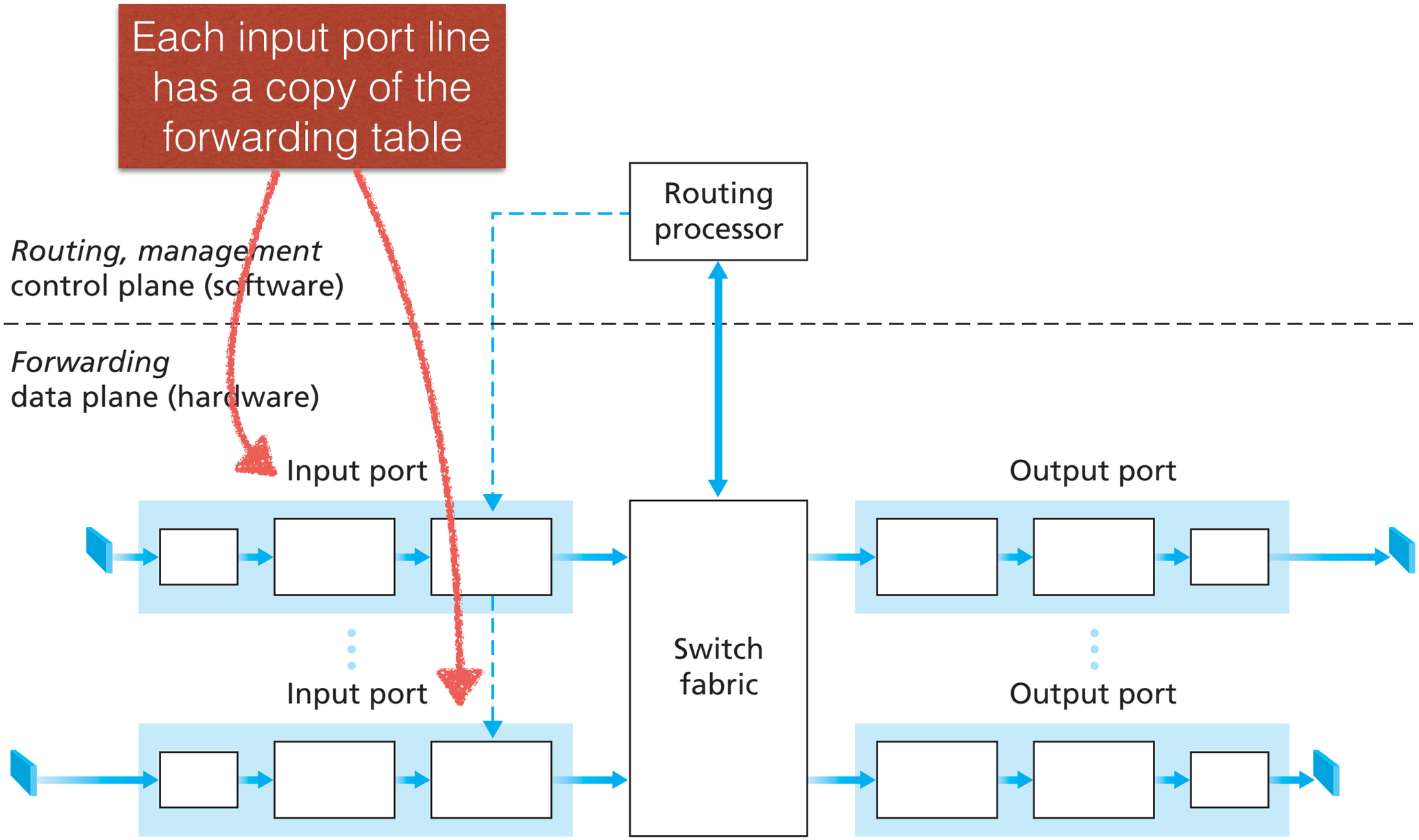

Cody Buntain: Lecture Slides for *Technologies Infrastructure and Architecture*
Licensed under the Creative Commons Attribution-NonCommercial-ShareAlike License: http://creativecommons.org/licenses/by-nc-sa/2.0/

Routers

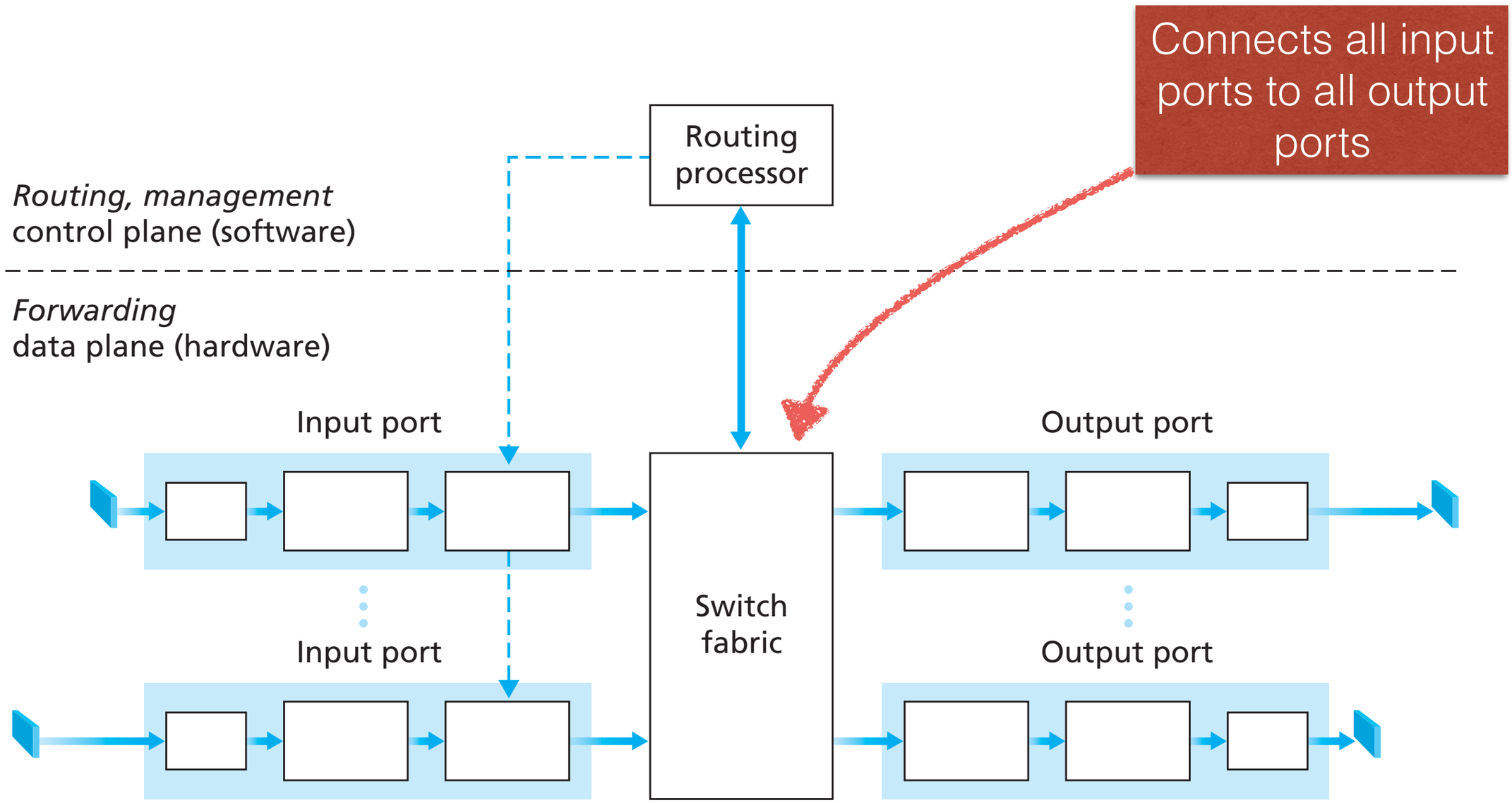

Cody Buntain: Lecture Slides for *Technologies Infrastructure and Architecture*
Licensed under the Creative Commons Attribution-NonCommercial-ShareAlike License: http://creativecommons.org/licenses/by-nc-sa/2.0/

Routers

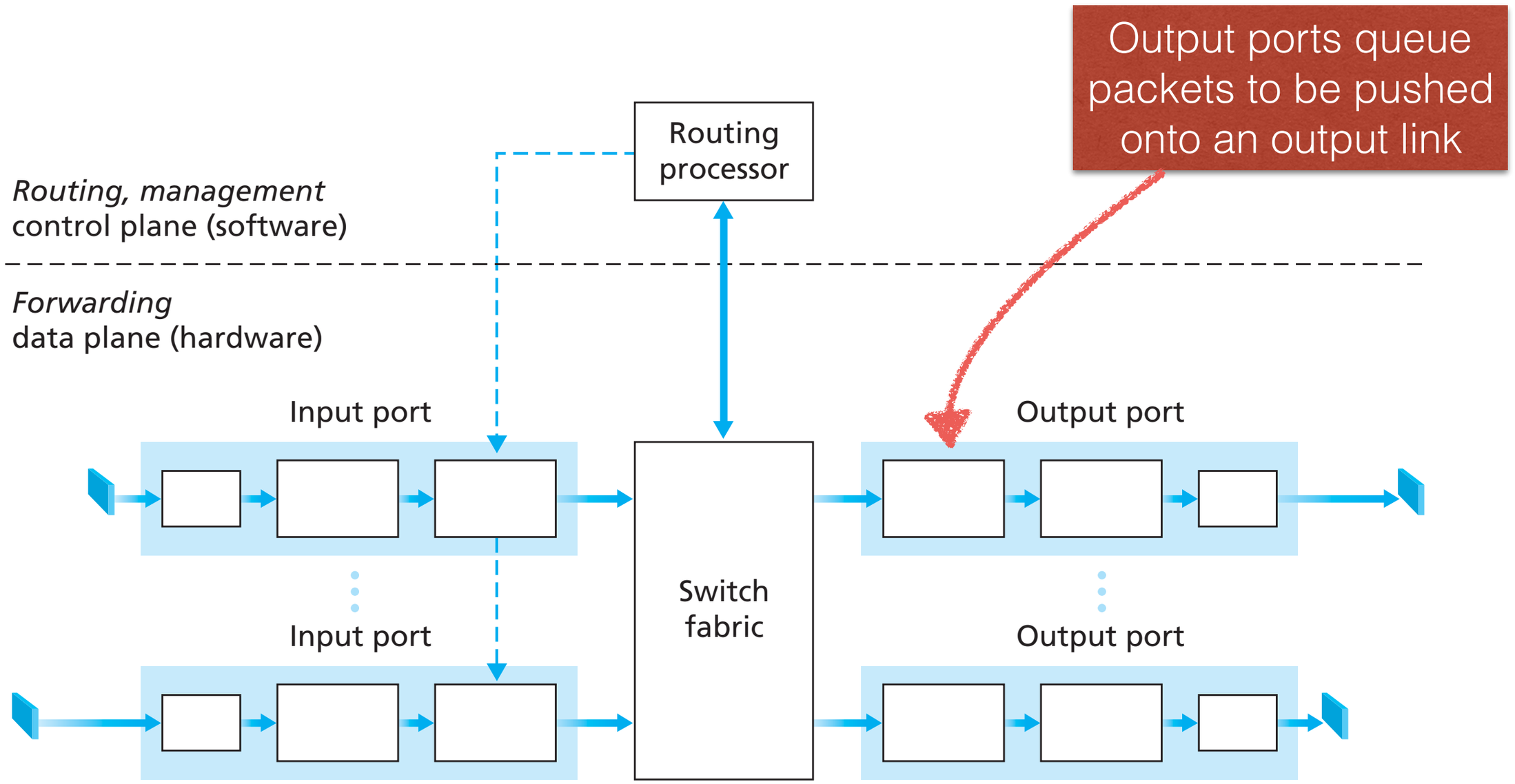

Cody Buntain: Lecture Slides for *Technologies Infrastructure and Architecture*
Licensed under the Creative Commons Attribution-NonCommercial-ShareAlike License: http://creativecommons.org/licenses/by-nc-sa/2.0/

Routers

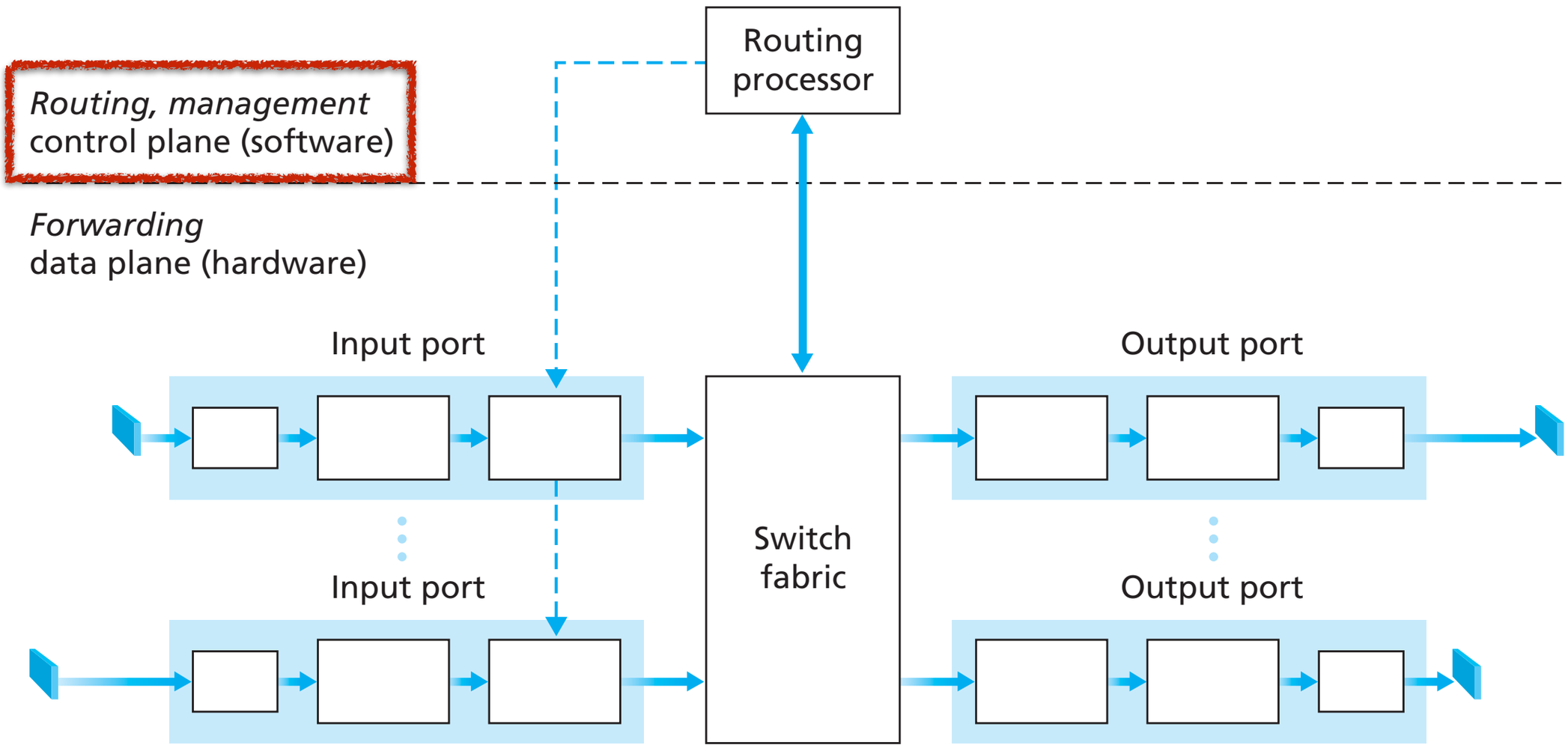

Cody Buntain: Lecture Slides for *Technologies Infrastructure and Architecture*
Licensed under the Creative Commons Attribution-NonCommercial-ShareAlike License: http://creativecommons.org/licenses/by-nc-sa/2.0/

Routers

- Routing control planes are generally proprietary
  - Closed source
  - Have highly versatile and interoperable APIs to allow for integration
- New push for **S**oftware-**D**efined **N**etworks (SDNs)
  - Move route processing to a central server
  - Central server then publishes routing information to routers

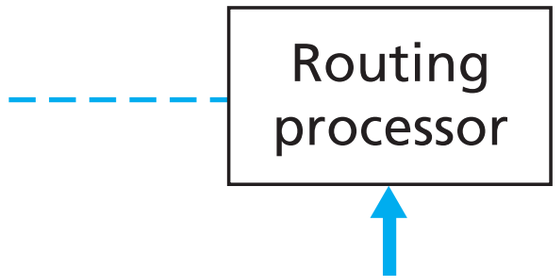

Licensed under the Creative Commons Attribution-NonCommercial-ShareAlike License: http://creativecommons.org/licenses/by-nc-sa/2.0/

Routers and Forwarding

Cody Buntain: Lecture Slides for *Technologies Infrastructure and Architecture*
Licensed under the Creative Commons Attribution-NonCommercial-ShareAlike License: http://creativecommons.org/licenses/by-nc-sa/2.0/

The Internet Protocol

- How does a router know where to send a packet?

- Each router maintains a **forwarding table**

- Forwarding tables **map IP addresses to links**

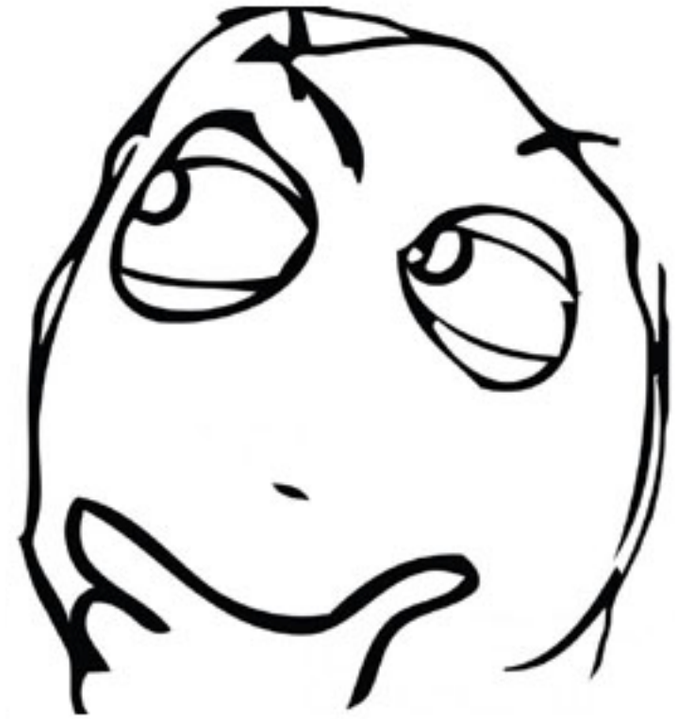

Licensed under the Creative Commons Attribution-NonCommercial-ShareAlike License: http://creativecommons.org/licenses/by-nc-sa/2.0/

The Internet Protocol

Router R1 Forwarding Table

Destination Address Range	Outgoing Interface
10.0.0.0/8	1
192.168.0.0/24	2
8.8.8.8	3
0.0.0.0/0	4

Default Gateway

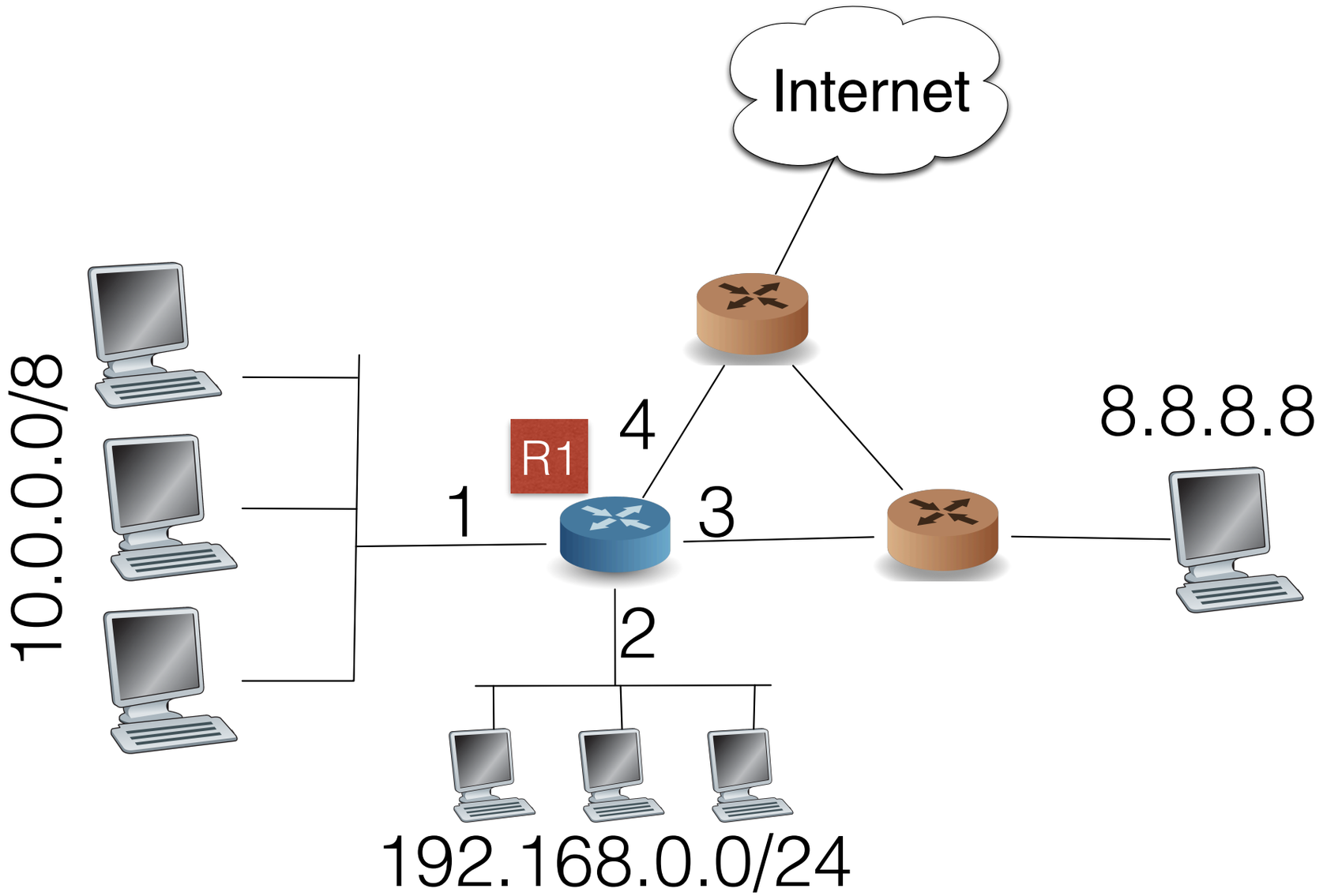

Cody Buntain: Lecture Slides for *Technologies Infrastructure and Architecture*
Licensed under the Creative Commons Attribution-NonCommercial-ShareAlike License: http://creativecommons.org/licenses/by-nc-sa/2.0/

The Internet Protocol

Router R1 Forwarding Table

Destination Address	Outgoing Interface
10.0.0.0/8	1
192.168.0.0/24	2
8.8.8.8	3
0.0.0.0/0	4

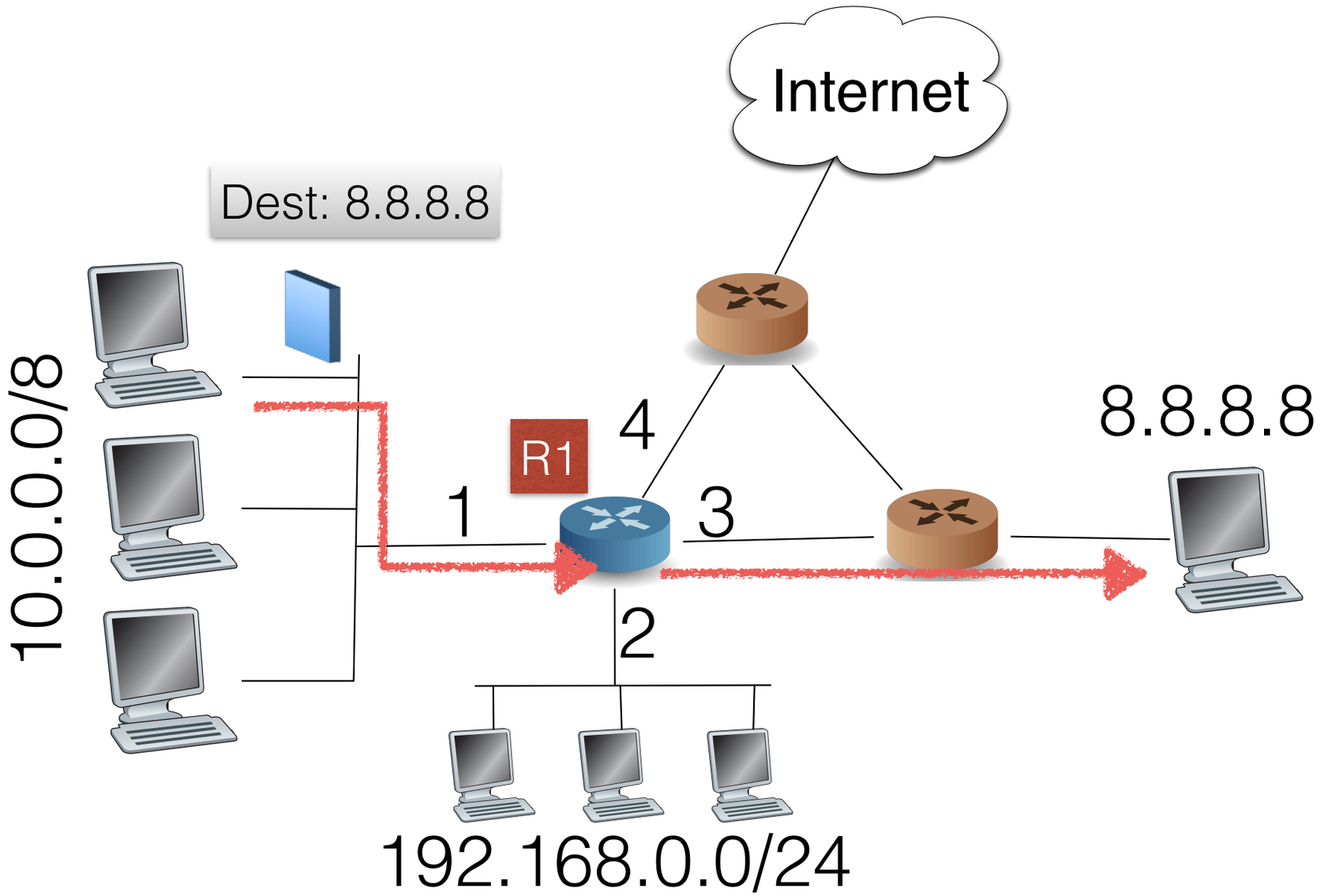

Licensed under the Creative Commons Attribution-NonCommercial-ShareAlike License: http://creativecommons.org/licenses/by-nc-sa/2.0/

The Internet Protocol

Router R1 Forwarding Table

Destination Address	Outgoing Interface
10.0.0.0/8	1
192.168.0.0/24	2
8.8.8.8	3
0.0.0.0/0	4

Matched Prefix: Index into routing table by left-most bits

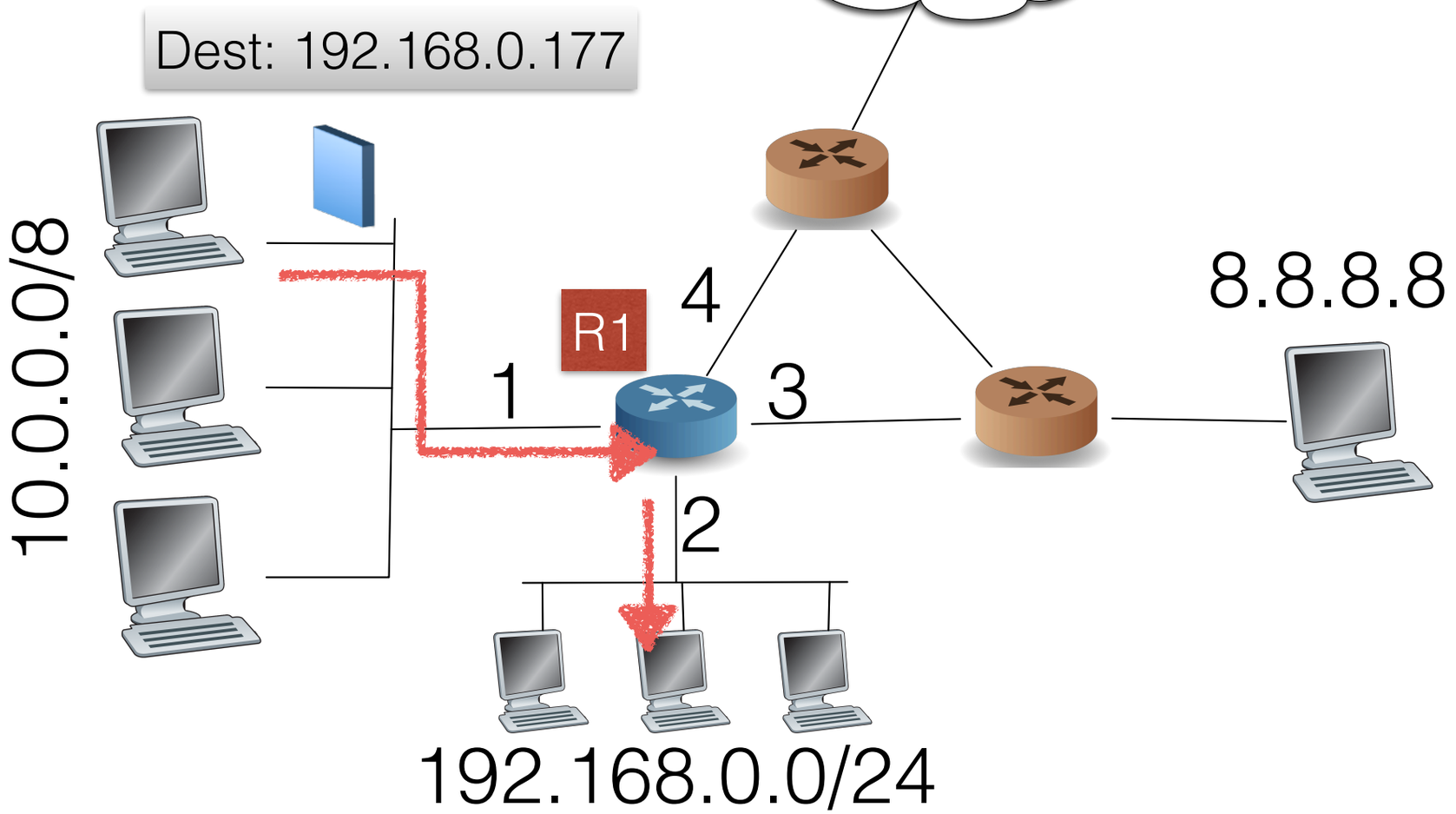

Cody Buntain: Lecture Slides for *Technologies Infrastructure and Architecture*
Licensed under the Creative Commons Attribution-NonCommercial-ShareAlike License: http://creativecommons.org/licenses/by-nc-sa/2.0/

The Internet Protocol

- Prefix matching uses subnet mask to mask off the host bits
  - Then match remaining subnet bits

```
    192.168.000.177
&   255.255.255.000
-----------------
    192.168.000.000
```

Router R1 Forwarding Table

Destination Address	Outgoing Interface
10.0.0.0/8	1
192.168.0.0/24	2
8.8.8.8	3
0.0.0.0/0	4

- What happens if there are multiple matches?

Cody Buntain: Lecture Slides for *Technologies Infrastructure and Architecture*
Licensed under the Creative Commons Attribution-NonCommercial-ShareAlike License: http://creativecommons.org/licenses/by-nc-sa/2.0/

The Internet Protocol

- Why did these packet **not** get sent out on interface 4, the default gateway?
  - All bits in the net mask match
  - I.e., since net mask is 0, none of the net mask bits are **mismatched**
- Answer: **Longest Prefix Matching Rule**
  - The most exact match wins

Router R1
Forwarding Table

Destination Address	Outgoing Interface
10.0.0.0/8	1
192.168.0.0/24	2
8.8.8.8	3
0.0.0.0/0	4

Cody Buntain: Lecture Slides for *Technologies Infrastructure and Architecture*
Licensed under the Creative Commons Attribution-NonCommercial-ShareAlike License: http://creativecommons.org/licenses/by-nc-sa/2.0/

The Internet Protocol

Router R1 Forwarding Table

Destination Address	Outgoing Interface
10.0.0.0/8	1
192.168.0.0/24	2
8.8.8.8	3
0.0.0.0/0	4

Matched Prefix: No direct match

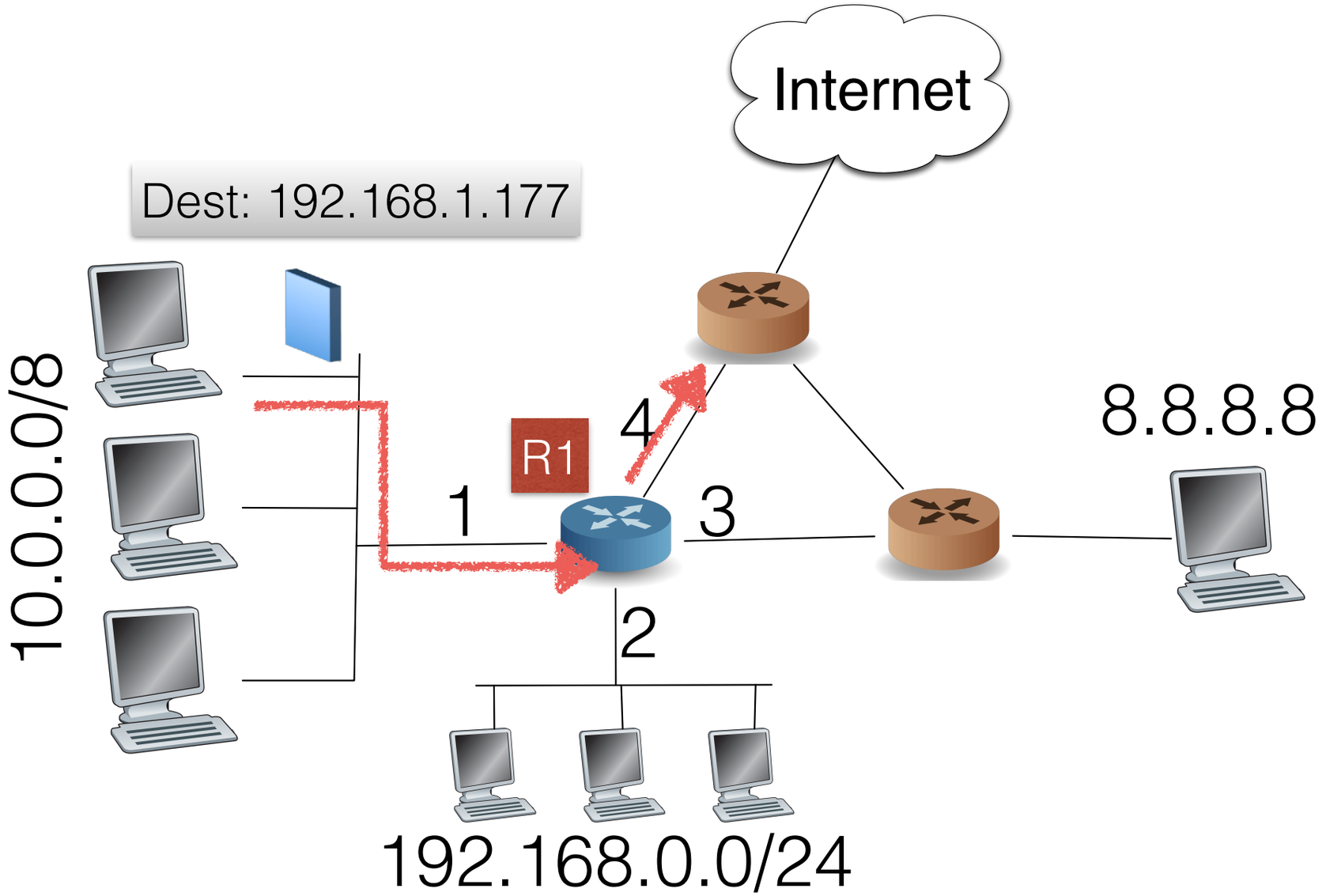

Cody Buntain: Lecture Slides for *Technologies Infrastructure and Architecture*
Licensed under the Creative Commons Attribution-NonCommercial-ShareAlike License: http://creativecommons.org/licenses/by-nc-sa/2.0/

The Internet Protocol

- Forwarding tables can also change at any time
  - The result of updates to routing tables, changes in topology, etc.
  - As a consequence, two packets may not take the same path

Licensed under the Creative Commons Attribution-NonCommercial-ShareAlike License: http://creativecommons.org/licenses/by-nc-sa/2.0/

The Internet Protocol

Router R1 Forwarding Table

Destination Address	Outgoing Interface
10.0.0.0/8	1
192.168.0.0/24	2
8.8.8.8	3
0.0.0.0/0	4

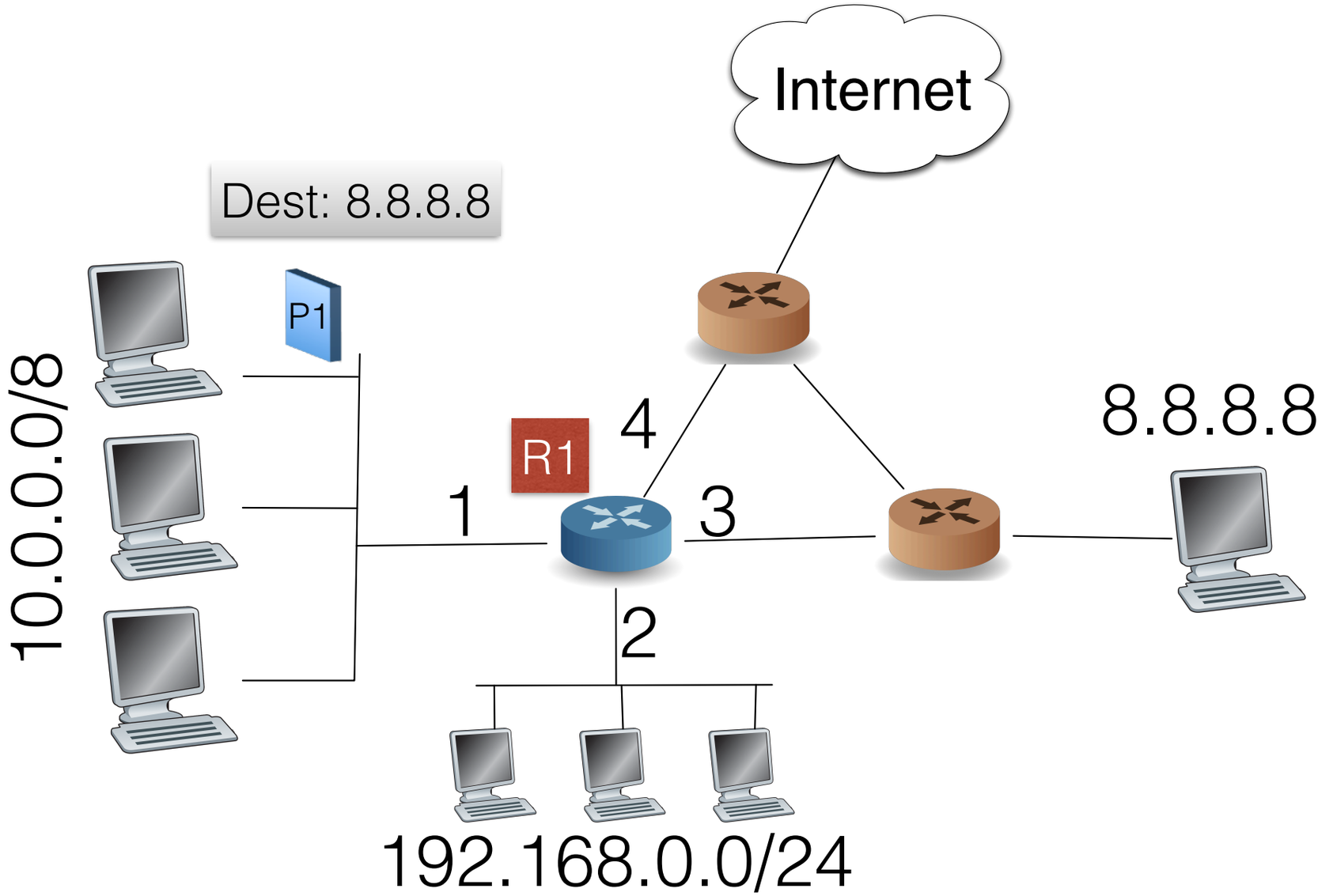

Cody Buntain: Lecture Slides for *Technologies Infrastructure and Architecture*
Licensed under the Creative Commons Attribution-NonCommercial-ShareAlike License: http://creativecommons.org/licenses/by-nc-sa/2.0/

The Internet Protocol

Router R1 Forwarding Table

Destination Address	Outgoing Interface
10.0.0.0/8	1
192.168.0.0/24	2
8.8.8.8	3
0.0.0.0/0	4

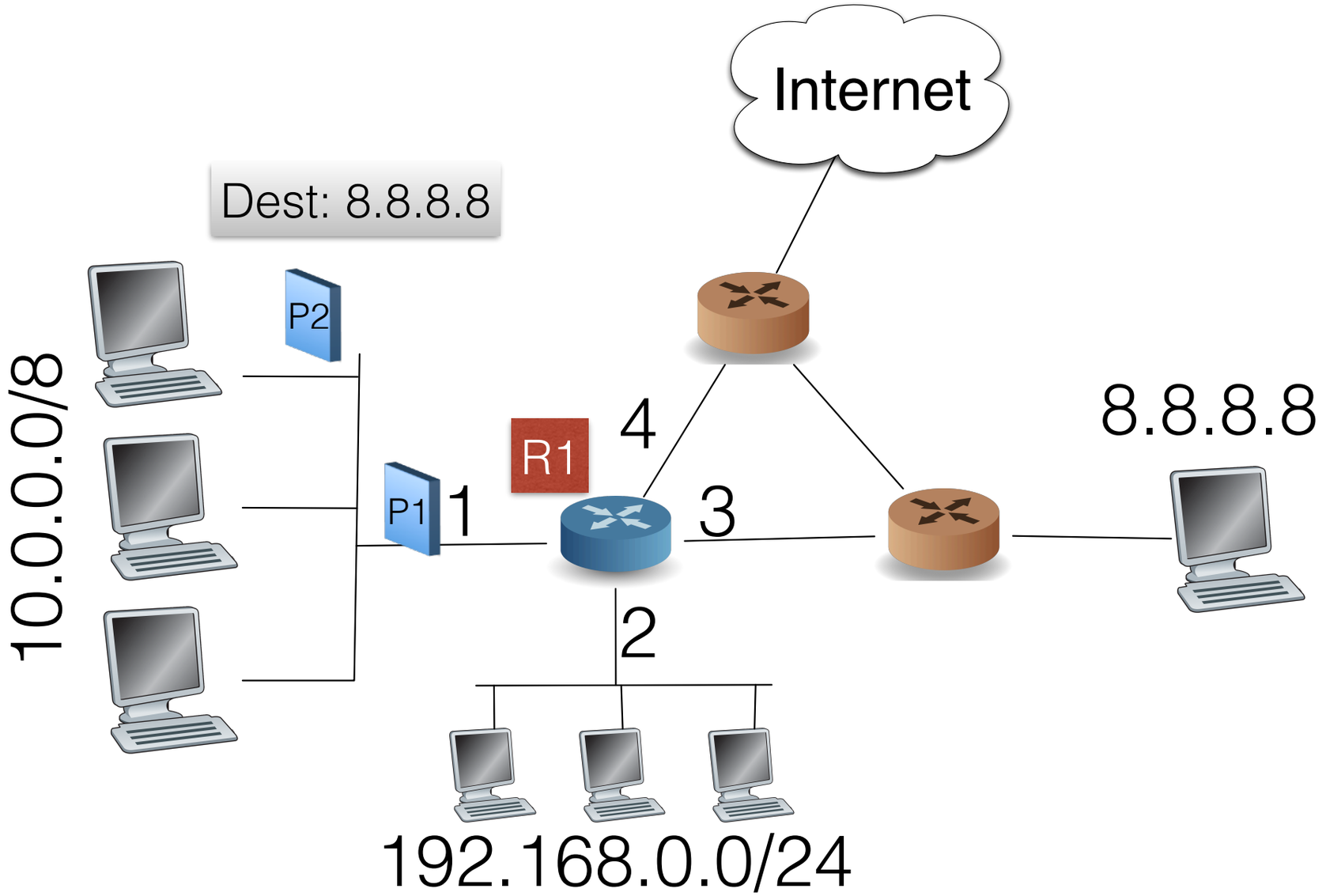

Cody Buntain: Lecture Slides for *Technologies Infrastructure and Architecture*
Licensed under the Creative Commons Attribution-NonCommercial-ShareAlike License: http://creativecommons.org/licenses/by-nc-sa/2.0/

The Internet Protocol

Router R1 Forwarding Table

Destination Address	Outgoing Interface
10.0.0.0/8	1
192.168.0.0/24	2
8.8.8.8	3
0.0.0.0/0	4

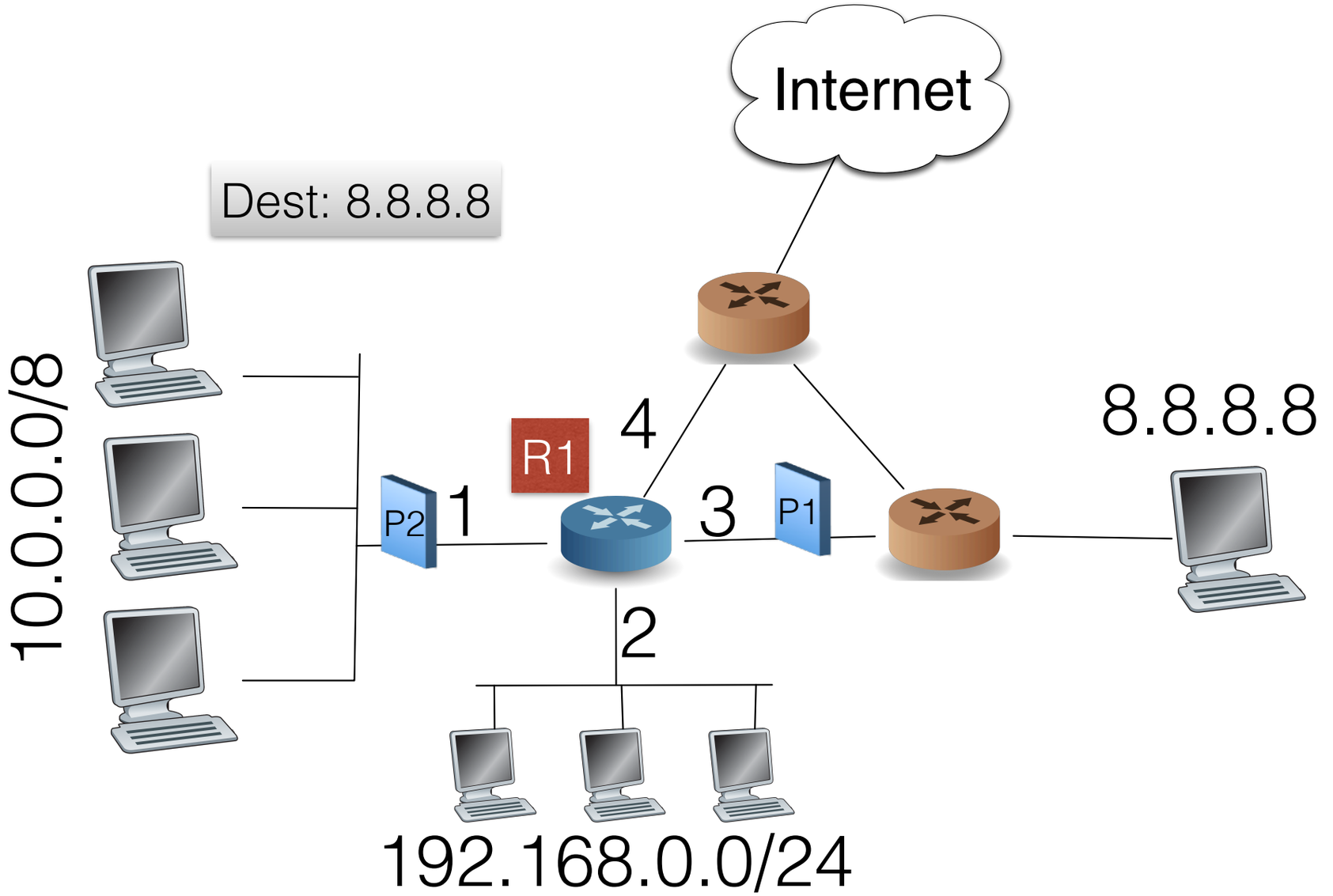

Cody Buntain: Lecture Slides for *Technologies Infrastructure and Architecture*
Licensed under the Creative Commons Attribution-NonCommercial-ShareAlike License: http://creativecommons.org/licenses/by-nc-sa/2.0/

The Internet Protocol

Router R1 Forwarding Table

Destination Address	Outgoing Interface
10.0.0.0/8	1
192.168.0.0/24	2
8.8.8.8	4
0.0.0.0/0	4

Router R1 receives update to forwarding table

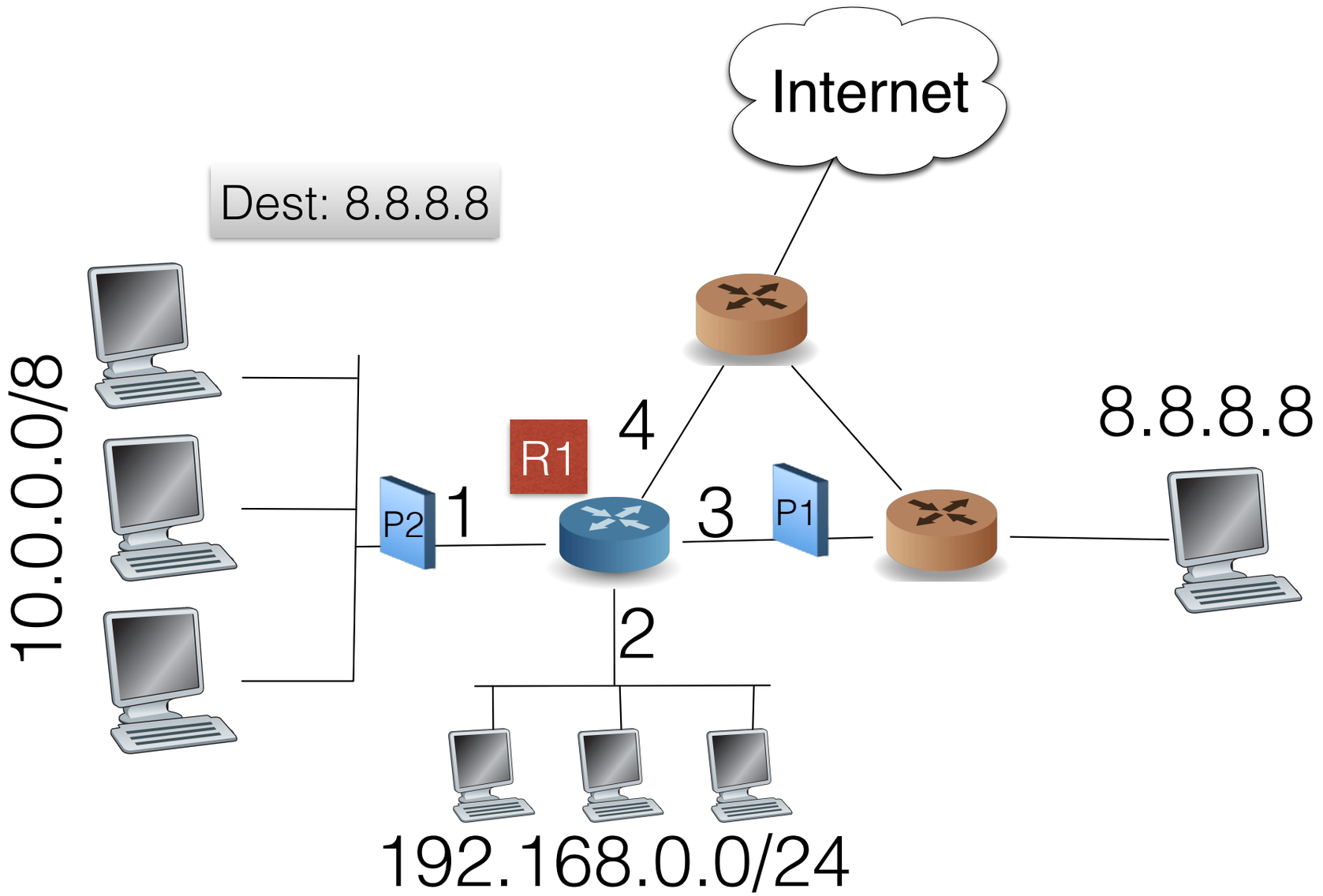

Cody Buntain: Lecture Slides for *Technologies Infrastructure and Architecture*
Licensed under the Creative Commons Attribution-NonCommercial-ShareAlike License: http://creativecommons.org/licenses/by-nc-sa/2.0/

The Internet Protocol

Router R1 Forwarding Table

Destination Address	Outgoing Interface
10.0.0.0/8	1
192.168.0.0/24	2
8.8.8.8	4
0.0.0.0/0	4

Router R1 receives update to forwarding table

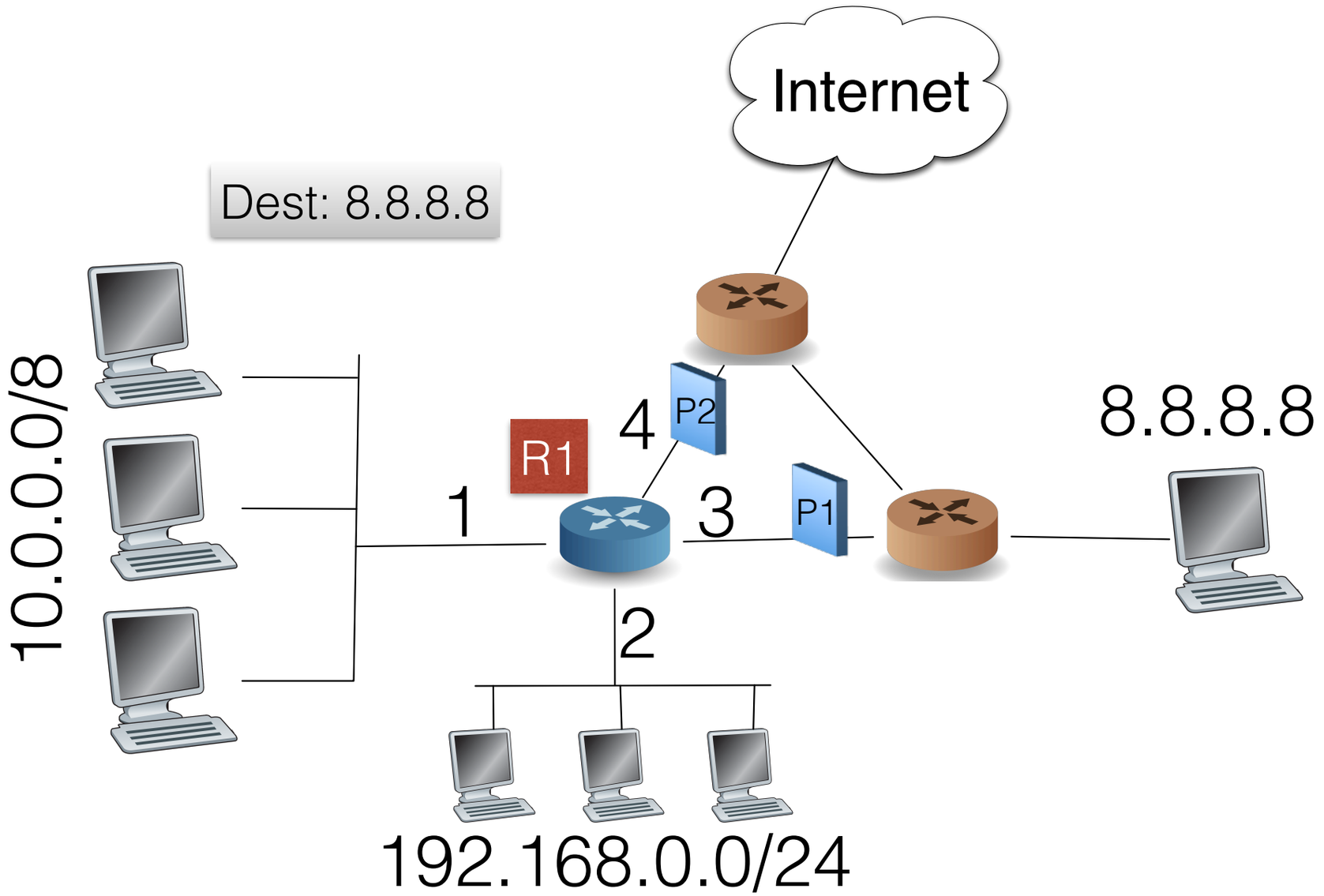

Cody Buntain: Lecture Slides for *Technologies Infrastructure and Architecture*
Licensed under the Creative Commons Attribution-NonCommercial-ShareAlike License: http://creativecommons.org/licenses/by-nc-sa/2.0/

The Internet Protocol

Router R1 Forwarding Table

Destination Address	Outgoing Interface
10.0.0.0/8	1
192.168.0.0/24	2
8.8.8.8	4
0.0.0.0/0	4

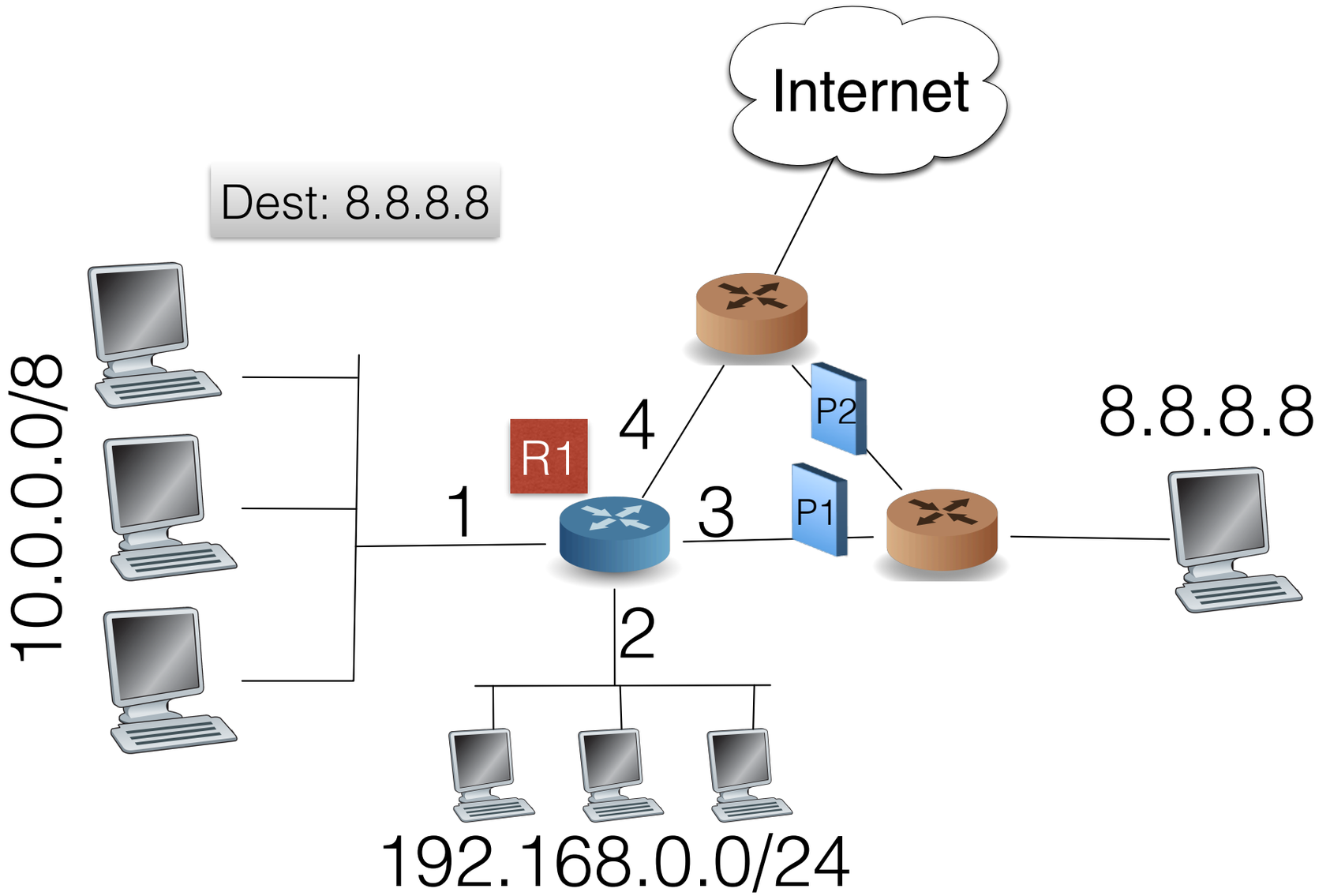

Cody Buntain: Lecture Slides for *Technologies Infrastructure and Architecture*
Licensed under the Creative Commons Attribution-NonCommercial-ShareAlike License: http://creativecommons.org/licenses/by-nc-sa/2.0/

The Internet Protocol

Router R1 Forwarding Table

Destination Address	Outgoing Interface
10.0.0.0/8	1
192.168.0.0/24	2
8.8.8.8	4
0.0.0.0/0	4

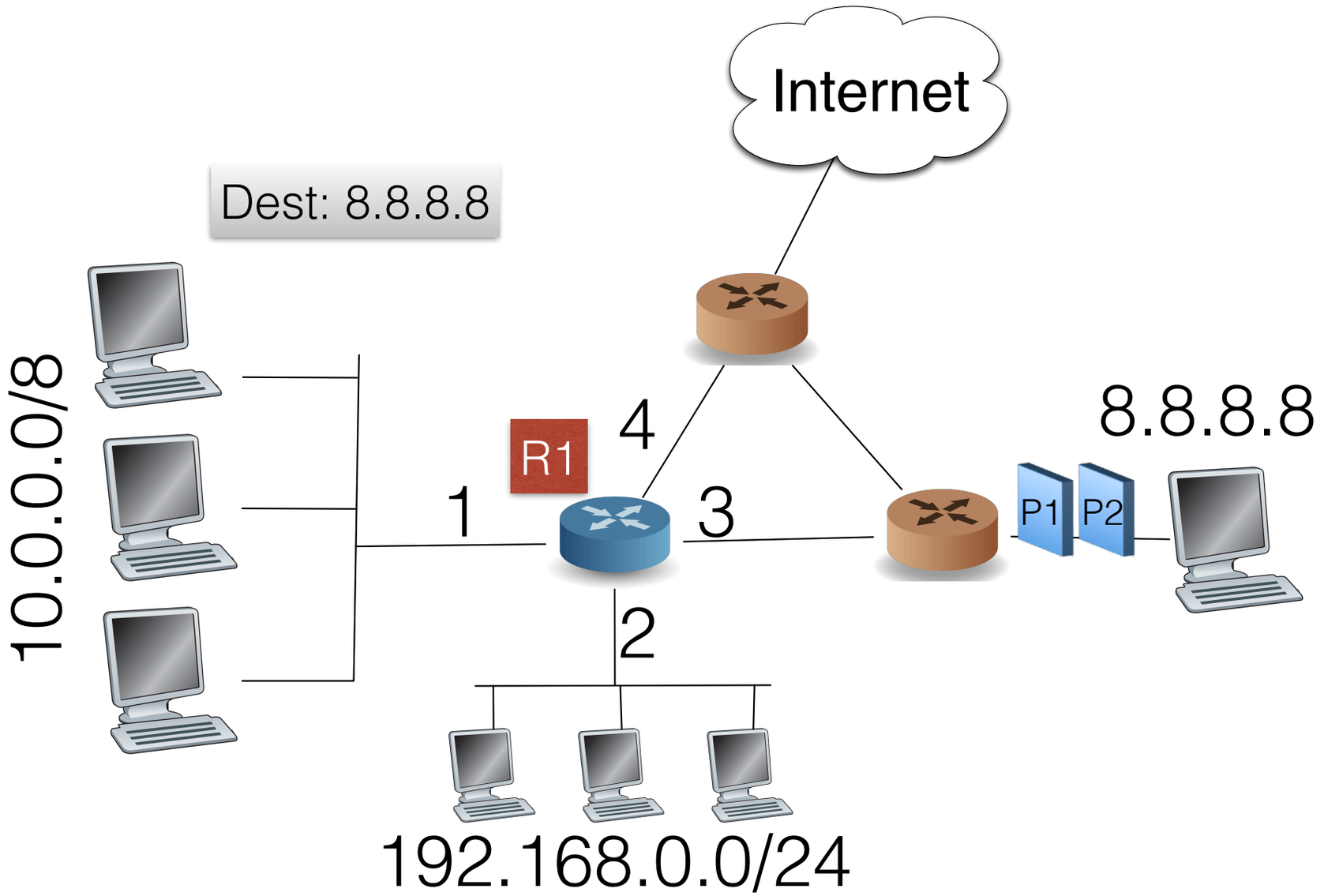

Cody Buntain: Lecture Slides for *Technologies Infrastructure and Architecture*
Licensed under the Creative Commons Attribution-NonCommercial-ShareAlike License: http://creativecommons.org/licenses/by-nc-sa/2.0/

Questions about forwarding tables?

Licensed under the Creative Commons Attribution-NonCommercial-ShareAlike License: http://creativecommons.org/licenses/by-nc-sa/2.0/

Network Neutrality

Licensed under the Creative Commons Attribution-NonCommercial-ShareAlike License: http://creativecommons.org/licenses/by-nc-sa/2.0/

Have you heard of

Net Neutrality?

Licensed under the Creative Commons Attribution-NonCommercial-ShareAlike License: http://creativecommons.org/licenses/by-nc-sa/2.0/

Net Neutrality

- What does “Net Neutrality” mean?
  - Should ISPs be treated as public utilities?
    - “Title II” regulation
- If yes:
  - No preference on data type, source, or content
- If no:
  - ISPs should be allowed to charge for different tiers of service

Licensed under the Creative Commons Attribution-NonCommercial-ShareAlike License: http://creativecommons.org/licenses/by-nc-sa/2.0/

Net Neutrality

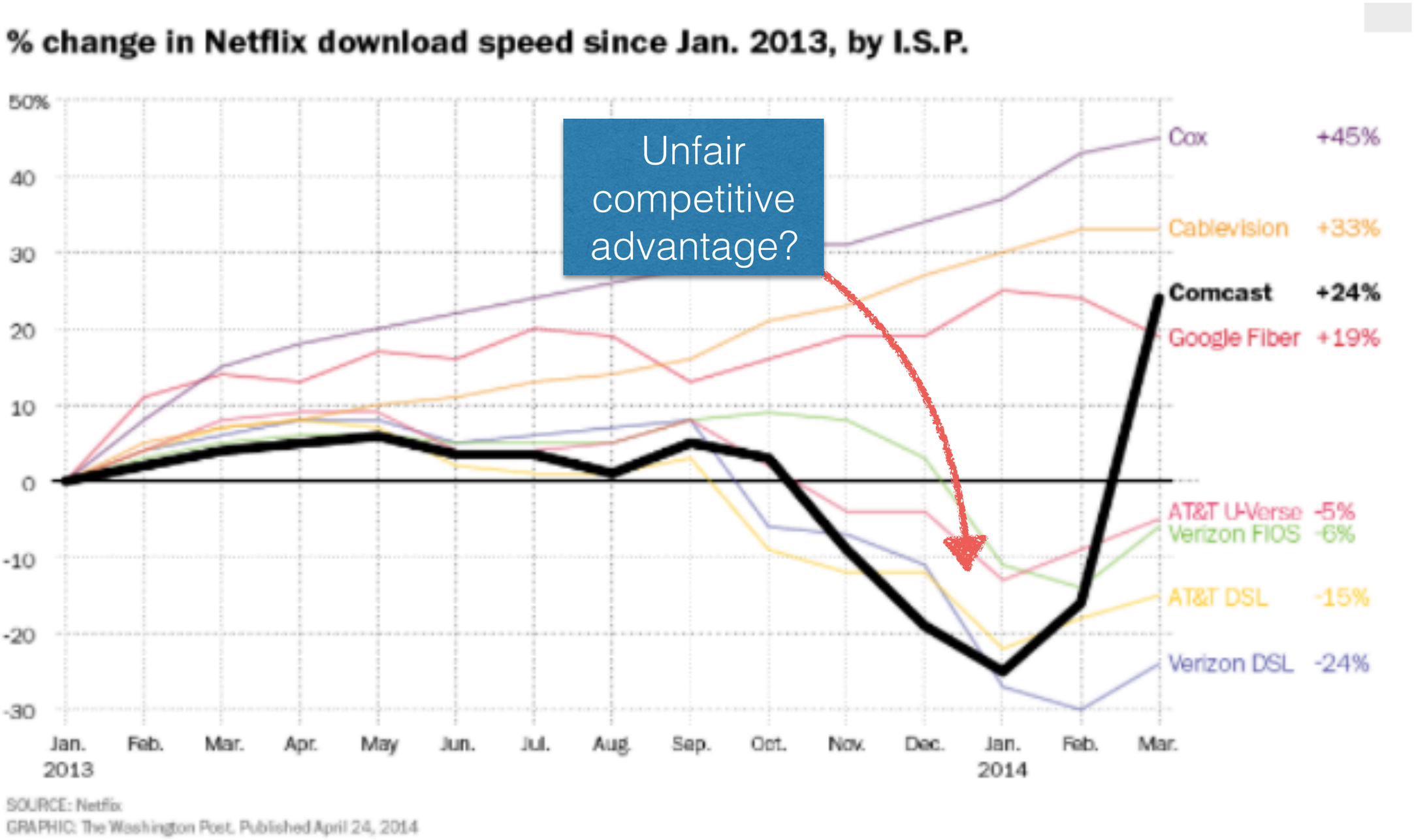

Licensed under the Creative Commons Attribution-NonCommercial-ShareAlike License: http://creativecommons.org/licenses/by-nc-sa/2.0/

Arguments for Net Neutrality

- Preserve freedom of speech
  - Your ISP could control the content you can read
- Prevent ISPs as toll collectors and gate keepers
  - A company might have to pay to ensure people can access their content

Licensed under the Creative Commons Attribution-NonCommercial-ShareAlike License: http://creativecommons.org/licenses/by-nc-sa/2.0/

Arguments for Net Neutrality

- Prevent **anti-competitive behavior**
  - One ISP could give preference to its service over competitors on its network
  - An older, wealthier company could pay ISPs to stifle newer competition

Licensed under the Creative Commons Attribution-NonCommercial-ShareAlike License: http://creativecommons.org/licenses/by-nc-sa/2.0/

Arguments for Net Neutrality

Cody Buntain: Lecture Slides for *Technologies Infrastructure and Architecture*
Licensed under the Creative Commons Attribution-NonCommercial-ShareAlike License: http://creativecommons.org/licenses/by-nc-sa/2.0/

Arguments for Net Neutrality

- Preserve the layered structure of the Internet
  - Should the network core alter service based on application content?

Licensed under the Creative Commons Attribution-NonCommercial-ShareAlike License: http://creativecommons.org/licenses/by-nc-sa/2.0/

Supporters of Net Neutrality

- Mostly Internet application companies
  - Twitter, Amazon, Netflix
  - Yahoo!, Vonage, Microsoft
- People:
  - Vint Cerf, Lawrence Lessig, Tim Berners-Lee
  - Steve Wozniak, President Obama

Licensed under the Creative Commons Attribution-NonCommercial-ShareAlike License: http://creativecommons.org/licenses/by-nc-sa/2.0/

Arguments Against Net Neutrality

- Primarily financial
  - ISPs should be allowed to monetize their networks
  - Increase in revenue will support additional investment and competition

Licensed under the Creative Commons Attribution-NonCommercial-ShareAlike License: http://creativecommons.org/licenses/by-nc-sa/2.0/

BROADBAND IN MISSISSIPPI

See all states

68%

BROADBAND COVERAGE

39%

POPULATION UNDERSERVED

25.8

MBPS AVERAGE
STATE-WIDE SPEED

49th

MOST
CONNECTED STATE

COVERAGE BY COUNTY

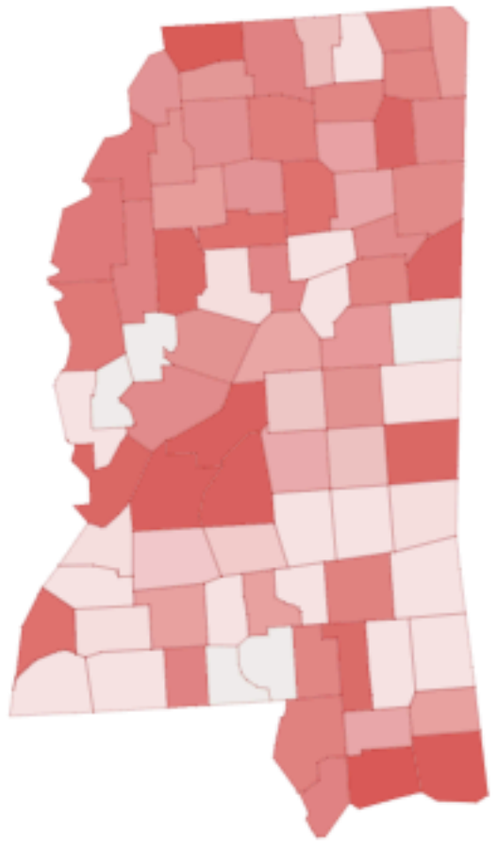

25+ mbps | 100+ mbps | 1 Gbit

Embed this map Customize map

Cody Buntain: Lecture Slides for *Technologies Infrastructure and Architecture*
Licensed under the Creative Commons Attribution-NonCommercial-ShareAlike License: http://creativecommons.org/licenses/by-nc-sa/2.0/

Nationwide

Residents without broadband access by household median income

Below $34,783

11.9%

$34,783 to $46,875

14.7%

$46,875 to $60,223

12.7%

$60,223 to $80,694

7.8%

Greater than $80,694

2.6%

Source: Center for Public Integrity analysis of Federal Communications Commission, Census Bureau data

Road map by Stamen Design (CC BY 3.0), OpenStreetMap contributors.

Methodology

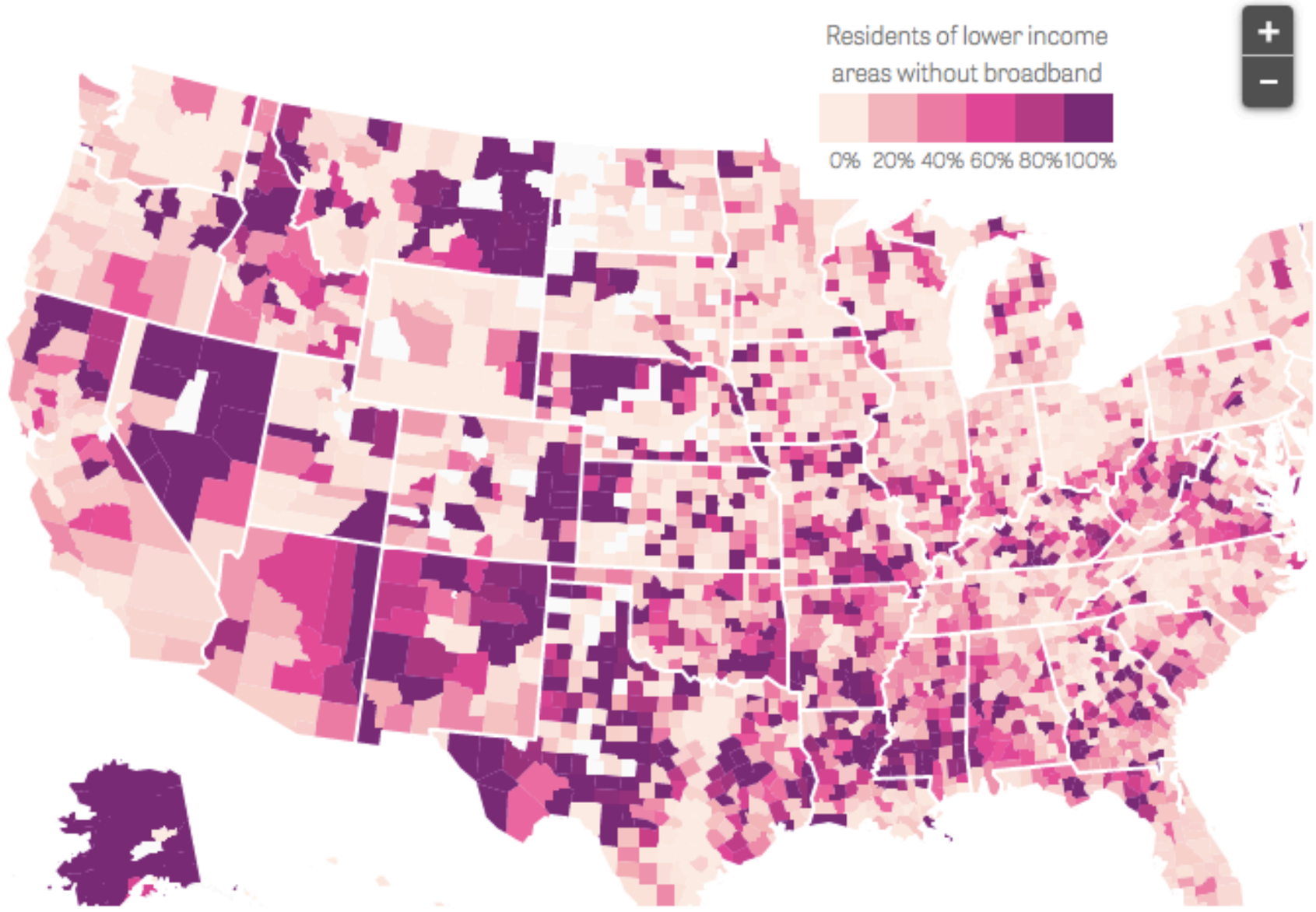

Cody Buntain: Lecture Slides for *Technologies Infrastructure and Architecture*
Licensed under the Creative Commons Attribution-NonCommercial-ShareAlike License: http://creativecommons.org/licenses/by-nc-sa/2.0/

Nationwide

Residents without broadband access by household median income

Below $34,783

11.9%

$34,783 to $46,875

14.7%

$46,875 to $60,223

12.7%

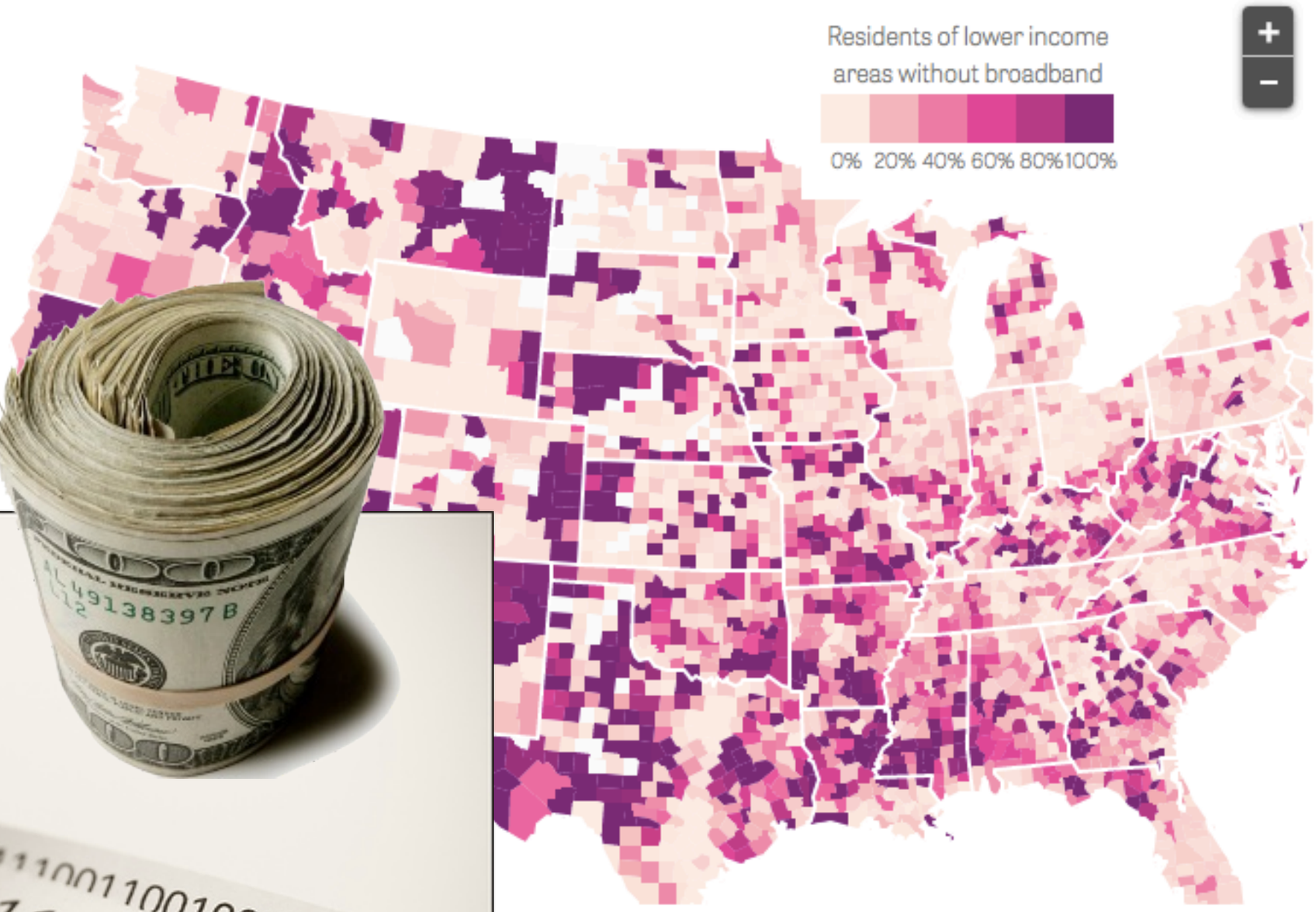

Cody Buntain: Lecture Slides for *Technologies Infrastructure and Architecture*
Licensed under the Creative Commons Attribution-NonCommercial-ShareAlike License: http://creativecommons.org/licenses/by-nc-sa/2.0/

Arguments Against Net Neutrality

- Regulation does not address “server-side non-neutrality”
- Big companies can build out huge infrastructure and push out smaller companies by providing better access

Licensed under the Creative Commons Attribution-NonCommercial-ShareAlike License: http://creativecommons.org/licenses/by-nc-sa/2.0/

Arguments Against Net Neutrality

- Claims the US already has adequate choice in broadband providers
  - Therefore, no compelling reason for regulation

Licensed under the Creative Commons Attribution-NonCommercial-ShareAlike License: http://creativecommons.org/licenses/by-nc-sa/2.0/

Arguments Against Net Neutrality

- Prevents overuse of bandwidth
- Allow ISPs to charge companies like YouTube and Netflix for using large amounts of bandwidth
- Otherwise, the cost of upgrading networks may have to be spread over all users

Licensed under the Creative Commons Attribution-NonCommercial-ShareAlike License: http://creativecommons.org/licenses/by-nc-sa/2.0/

Arguments Against Net Neutrality

- The Internet is not “broken”
- Many opponents of NN point to the success of the Internet to date **without** government regulation as proof such regulation is not necessary

Licensed under the Creative Commons Attribution-NonCommercial-ShareAlike License: http://creativecommons.org/licenses/by-nc-sa/2.0/

Opponents of Net Neutrality

- Mostly networking companies and ISPs
  - Verizon, AT&T, IBM, Cisco
  - dLink, Broadcom, Juniper
- People:
  - Bob Kahn (the other half of TCP/IP)
  - Gary Becker, Peter Thiel, and others

Licensed under the Creative Commons Attribution-NonCommercial-ShareAlike License: http://creativecommons.org/licenses/by-nc-sa/2.0/

Opponents of Net Neutrality

- Mostly networking companies and ISPs
  - Verizon, AT&T, IBM, Cisco
  - d[illegible]nk, Broadc[illegible] Juni[illegible]r
- People:
  - Bob Kahn (the other half of TCP/IP)
  - Gary Becker, Peter Thiel, and others

Licensed under the Creative Commons Attribution-NonCommercial-ShareAlike License: http://creativecommons.org/licenses/by-nc-sa/2.0/

Questions about Net Neutrality?

Licensed under the Creative Commons Attribution-NonCommercial-ShareAlike License: http://creativecommons.org/licenses/by-nc-sa/2.0/

IP Addressing

Licensed under the Creative Commons Attribution-NonCommercial-ShareAlike License: http://creativecommons.org/licenses/by-nc-sa/2.0/

Internet Protocol Addressing

- Have mentioned a host's "**IP address**" several times
  - What is its purpose?
  - What is its format?
  - How is it used?
  - How is it assigned?

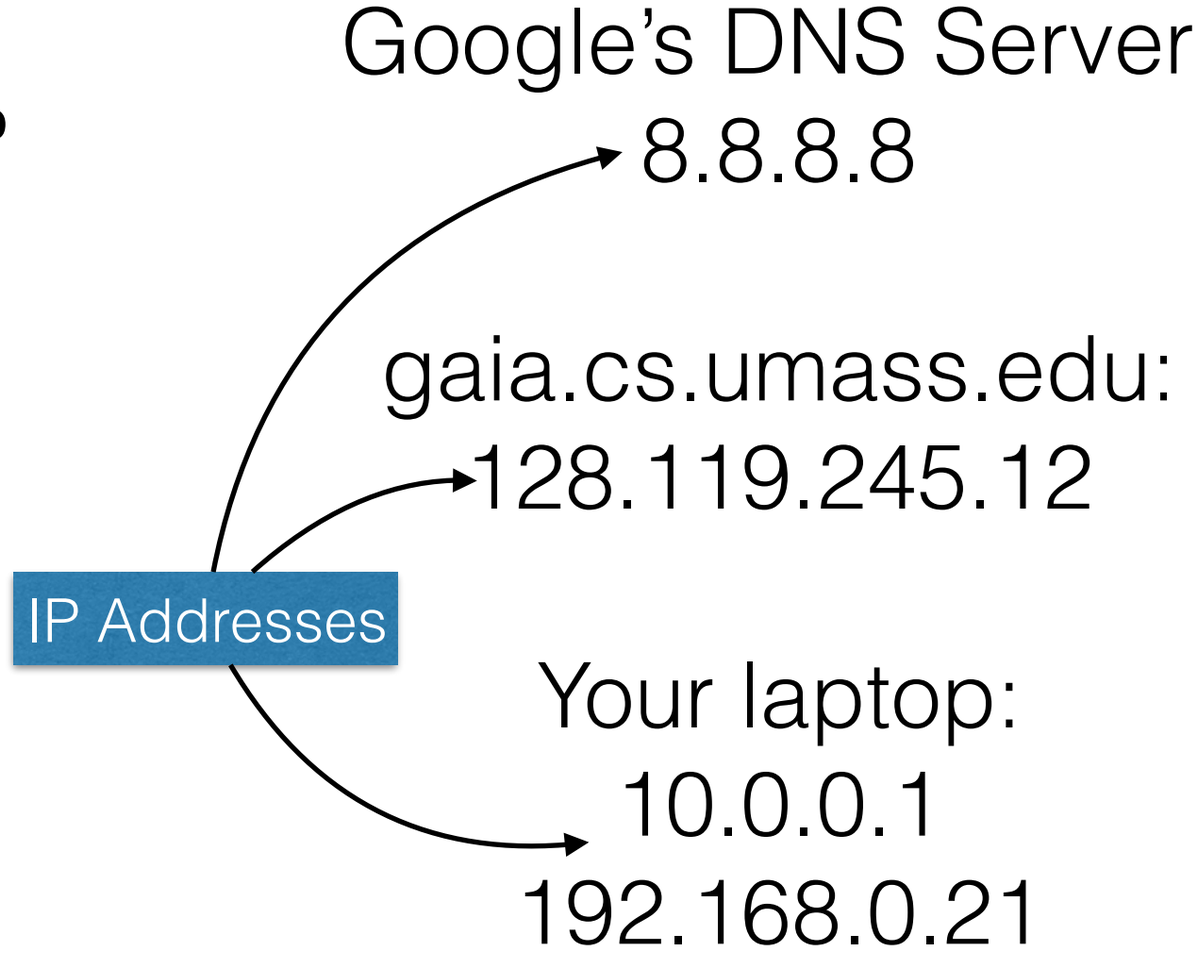

Licensed under the Creative Commons Attribution-NonCommercial-ShareAlike License: http://creativecommons.org/licenses/by-nc-sa/2.0/

IP Addressing

- What is the purpose of an IP address?
  - Generally used to **uniquely identify*** a particular Internet-connected device
- All **directly accessible*** devices on the Internet have a **unique IP address**
  - Routers and multi-homed hosts may have multiple addresses

Licensed under the Creative Commons Attribution-NonCommercial-ShareAlike License: http://creativecommons.org/licenses/by-nc-sa/2.0/

IP Addressing

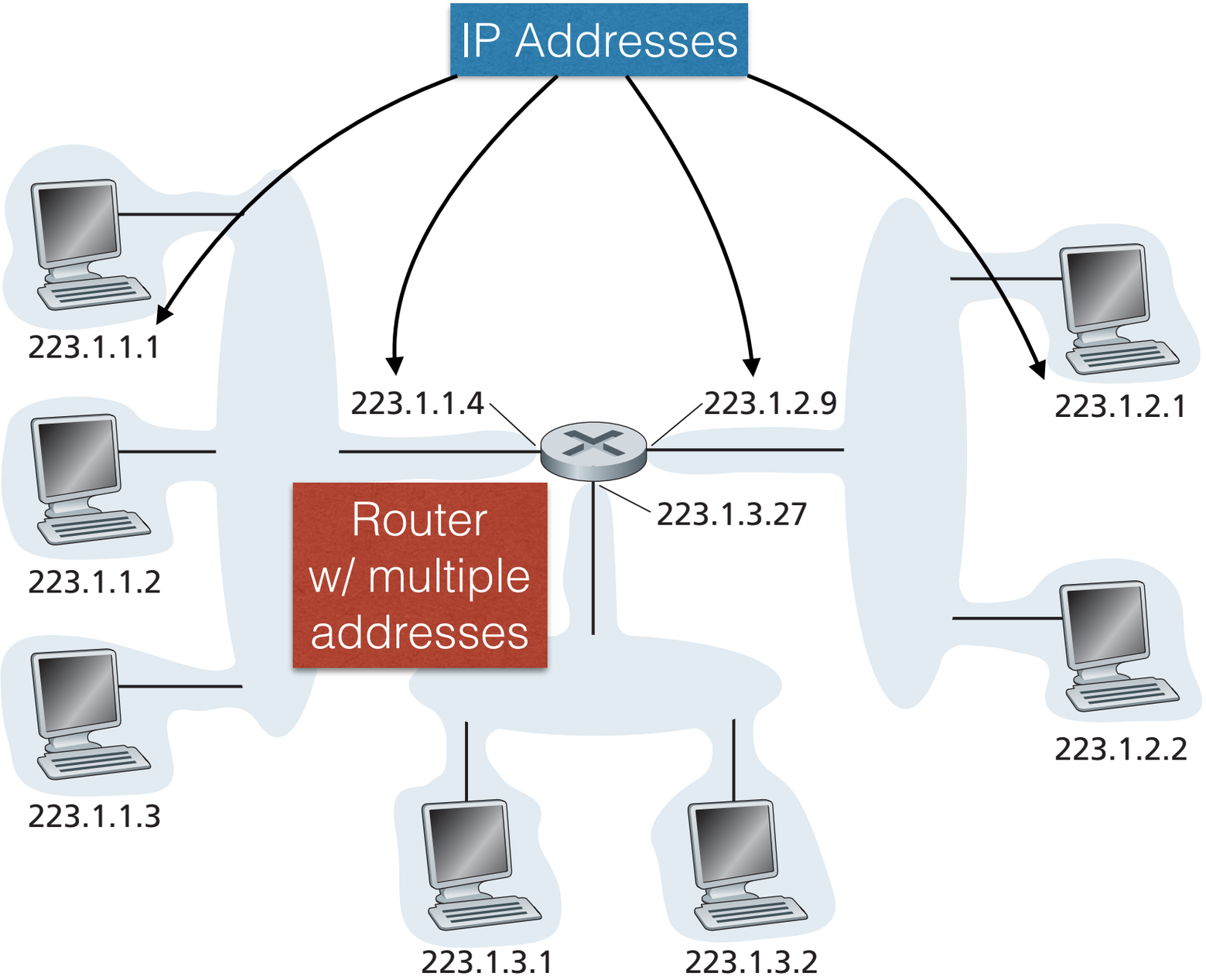

Cody Buntain: Lecture Slides for *Technologies Infrastructure and Architecture*
Licensed under the Creative Commons Attribution-NonCommercial-ShareAlike License: http://creativecommons.org/licenses/by-nc-sa/2.0/

IP Addressing

- *Not all IP addresses uniquely identify a single host
- Special **broadcast** IP addresses are sent to multiple hosts
- E.g., 255.255.255.255 => broadcast to all local IPs

Licensed under the Creative Commons Attribution-NonCommercial-ShareAlike License: http://creativecommons.org/licenses/by-nc-sa/2.0/

IP Addressing

- *Not all machines are directly accessible
- Computers behind NAT routers/firewalls
- E.g., hosts behind your home router
- More on this later

Licensed under the Creative Commons Attribution-NonCommercial-ShareAlike License: http://creativecommons.org/licenses/by-nc-sa/2.0/

IP Addressing

- What is the format for an IP address?
  - An IP address is a 32-bit number
  - Your machine is number: 4,109,331,337
    - Hard to remember and difficult to partition
  - Written out as four 8-bit numbers (**dotted-decimal notation**)
    - 4,109,331,337 = 244.239.107.137

Licensed under the Creative Commons Attribution-NonCommercial-ShareAlike License: http://creativecommons.org/licenses/by-nc-sa/2.0/

IP Addressing

- IP address for www.umd.edu:
  - 52.85.131.47

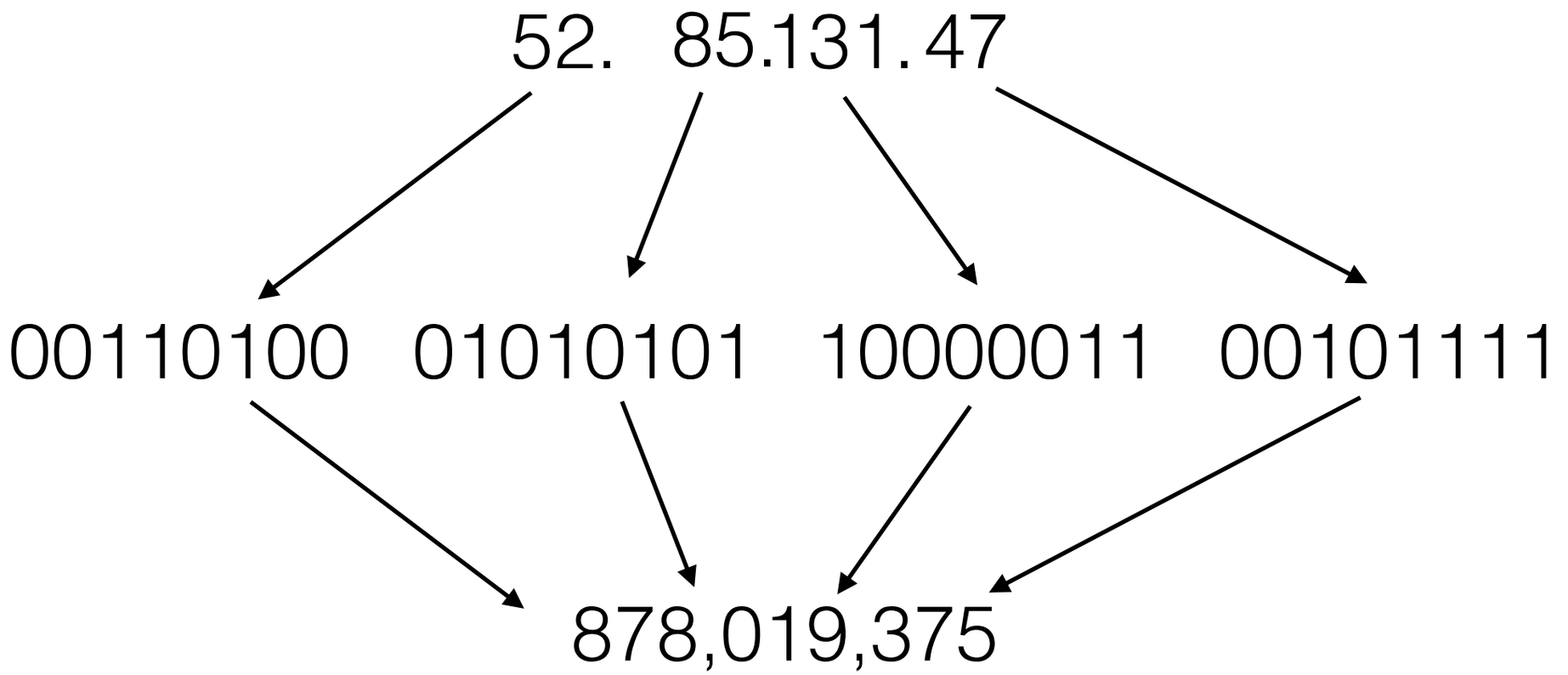

Cody Buntain: Lecture Slides for *Technologies Infrastructure and Architecture*
Licensed under the Creative Commons Attribution-NonCommercial-ShareAlike License: http://creativecommons.org/licenses/by-nc-sa/2.0/

IP Addressing

- Since each number in dotted-decimal notation is 8 bits, called an “octet”:
  - Each number is between 0-255
- IP address range:
  - 0.0.0.0 - 255.255.255.255
- Can uniquely address ~4.3 billion devices

Licensed under the Creative Commons Attribution-NonCommercial-ShareAlike License: http://creativecommons.org/licenses/by-nc-sa/2.0/

IP Addressing

- Since each number in dotted-decimal notation is 8 bits, called an
  - Each numbe
- IP address ran
  - 0.0.0.0 - 255.255.255.255
- Can uniquely address ~4.3 billion devices

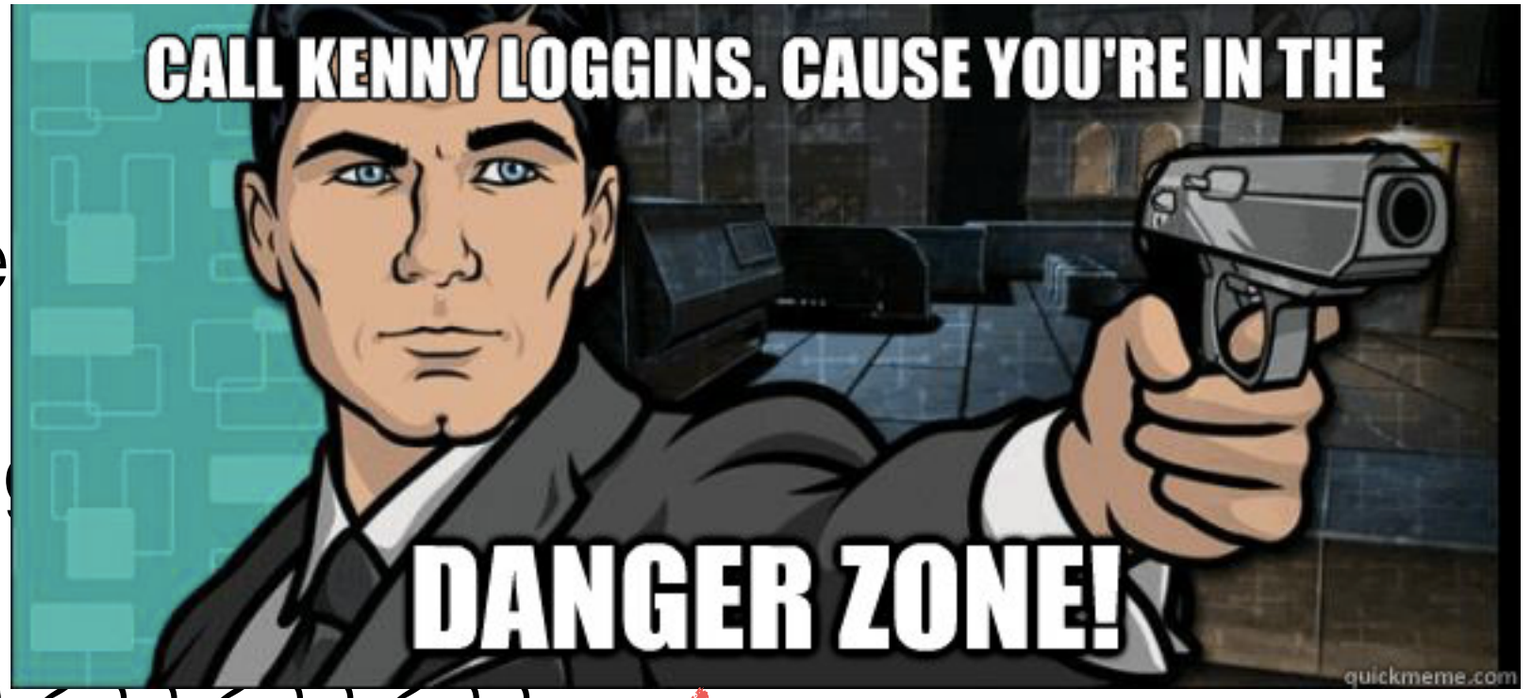

Licensed under the Creative Commons Attribution-NonCommercial-ShareAlike License: http://creativecommons.org/licenses/by-nc-sa/2.0/

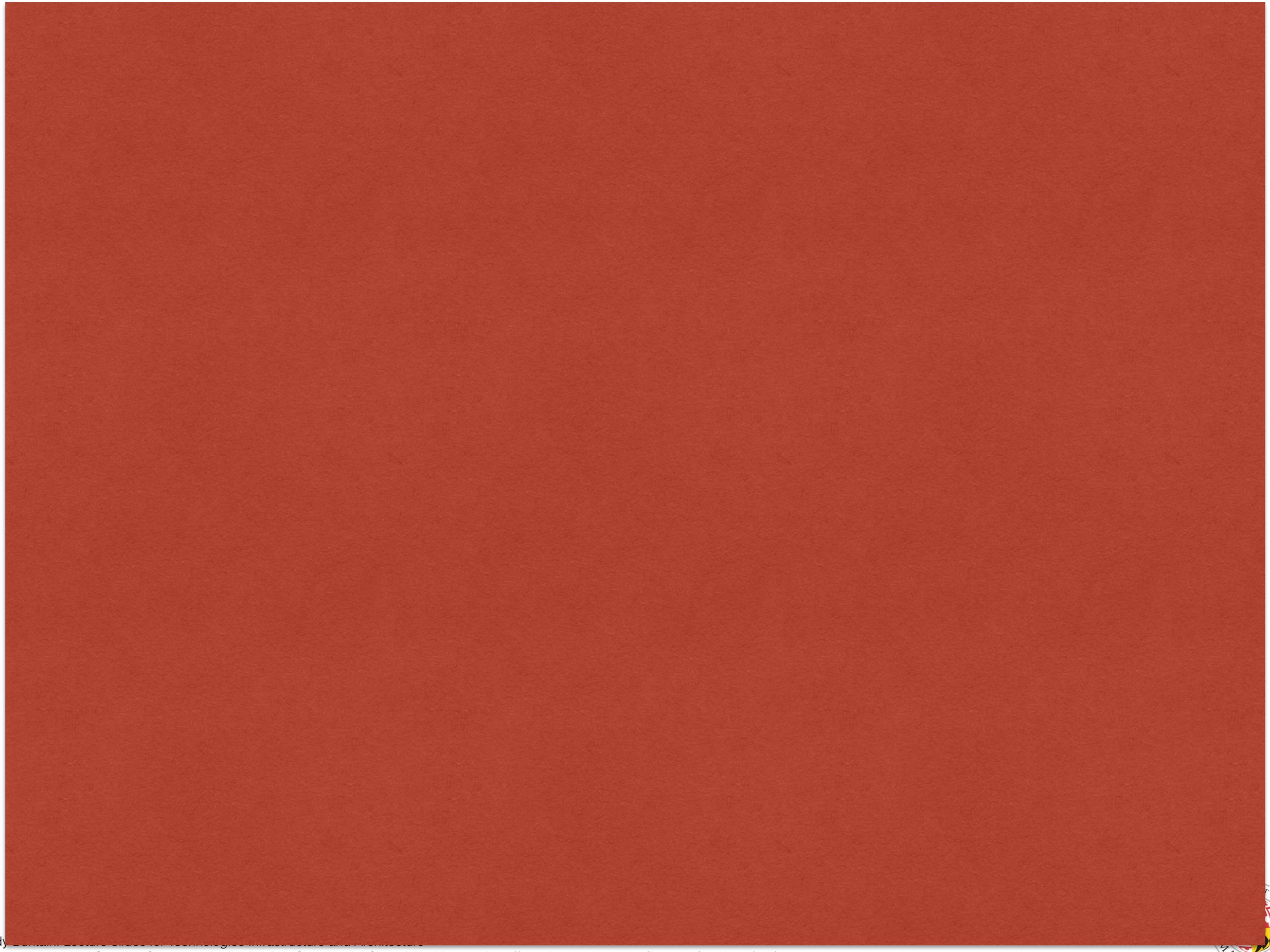

Licensed under the Creative Commons Attribution-NonCommercial-ShareAlike License: http://creativecommons.org/licenses/by-nc-sa/2.0/

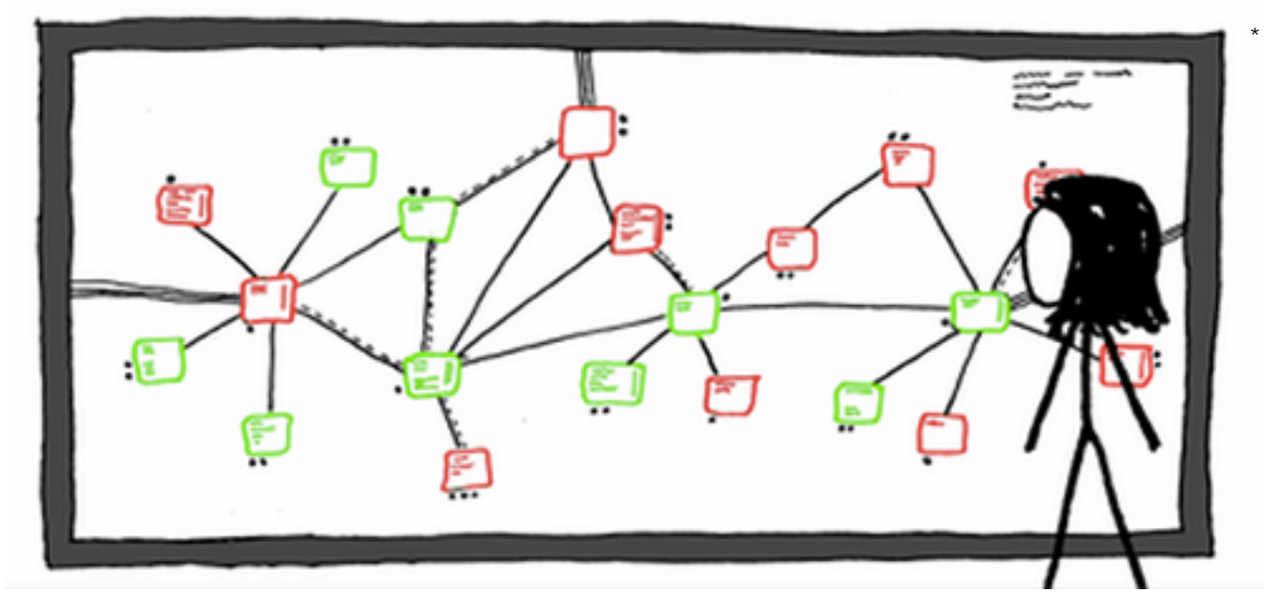

*

The Network Layer

INST346

Licensed under the Creative Commons Attribution-NonCommercial-ShareAlike License: http://creativecommons.org/licenses/by-nc-sa/2.0/

*Image from Randall Munroe's https://xkcd.com/350/

Today's Agenda

- Questions on lab 3 or homework 4?
- Quiz 9
- IP Addressing continued

Licensed under the Creative Commons Attribution-NonCommercial-ShareAlike License: http://creativecommons.org/licenses/by-nc-sa/2.0/

Quiz 9

Licensed under the Creative Commons Attribution-NonCommercial-ShareAlike License: http://creativecommons.org/licenses/by-nc-sa/2.0/

Question 1

1 / 1 pts

Including the IPv4 header, what is the maximum size of an IPv4 datagram?

- 32,768 bytes
- 1,500 bytes
- 1,024 bytes
- 65,536 bytes

Correct!

Cody Buntain: Lecture Slides for *Technologies Infrastructure and Architecture*
Licensed under the Creative Commons Attribution-NonCommercial-ShareAlike License: http://creativecommons.org/licenses/by-nc-sa/2.0/

Question 2 1 / 1 pts

What is the maximum diameter of an IP network? “Diameter” is defined as the longest path between two hosts.

- 512 hops
- 30 hops
- 64 hops
- **256 hops** — Correct!
- 128 hops

Cody Buntain: Lecture Slides for *Technologies Infrastructure and Architecture*
Licensed under the Creative Commons Attribution-NonCommercial-ShareAlike License: http://creativecommons.org/licenses/by-nc-sa/2.0/

Question 3 1 / 1 pts

How many different transport protocols can the Internet Protocol support?

- 4
- 128
- 256
- 2

Correct!

2.

Cody Buntain: Lecture Slides for *Technologies Infrastructure and Architecture*
Licensed under the Creative Commons Attribution-NonCommercial-ShareAlike License: http://creativecommons.org/licenses/by-nc-sa/2.0/

Question 4 1 / 1 pts

The IP header's checksum, like TCP and UDP's checksum, does not change as the IP packet is transferred through the Internet.

- ○ True
- ◉ False

Correct!

Cody Buntain: Lecture Slides for *Technologies Infrastructure and Architecture*
Licensed under the Creative Commons Attribution-NonCommercial-ShareAlike License: http://creativecommons.org/licenses/by-nc-sa/2.0/

Question 5 1 / 1 pts

Why is datagram fragmentation supported in IPv4?

Correct!

- (•) To support links with different MTUs along a path
- ( ) To support hosts with different receive windows along a path
- ( ) To support routers with different buffer sizes along a path

Cody Buntain: Lecture Slides for *Technologies Infrastructure and Architecture*
Licensed under the Creative Commons Attribution-NonCommercial-ShareAlike License: http://creativecommons.org/licenses/by-nc-sa/2.0/

Question 6

1 / 1 pts

Match the IPv4 header field to its analogous TCP header field.

Correct! **Fragment ID** — Sequence Number

Correct! **Protocol ID** — Port Number

Correct! **Checksum** — Checksum

Cody Buntain: Lecture Slides for *Technologies Infrastructure and Architecture*
Licensed under the Creative Commons Attribution-NonCommercial-ShareAlike License: http://creativecommons.org/licenses/by-nc-sa/2.0/

Question 7 1 / 1 pts

The IP checksum ensures the datagram payload is not corrupted during transmission.

- True
- False

Correct!

Cody Buntain: Lecture Slides for *Technologies Infrastructure and Architecture*
Licensed under the Creative Commons Attribution-NonCommercial-ShareAlike License: http://creativecommons.org/licenses/by-nc-sa/2.0/

Question 8 1 / 1 pts

All hosts in the same **subnet** must have the same CIDR prefix in their IP addresses.

Correct!

- (•) True
- ( ) False

Cody Buntain: Lecture Slides for *Technologies Infrastructure and Architecture*
Licensed under the Creative Commons Attribution-NonCommercial-ShareAlike License: http://creativecommons.org/licenses/by-nc-sa/2.0/

Question 9 1 / 1 pts

If an isolated subnet contains 32 IP addresses with attached, listening network interfaces, and one interface sends a UDP segment to the IP address 255.255.255.255, how many interfaces will receive this segment?

Correct!

32.0000

Correct Answers

32.0 (with margin: 0.0)

Cody Buntain: Lecture Slides for *Technologies Infrastructure and Architecture*
Licensed under the Creative Commons Attribution-NonCommercial-ShareAlike License: http://creativecommons.org/licenses/by-nc-sa/2.0/

Question 10

1 / 1 pts

How many class C subnet exist in the CIDR prefix 200.23.16.0/20?

Correct!

16.0000

Correct Answers

16.0 (with margin: 0.0)

Cody Buntain: Lecture Slides for *Technologies Infrastructure and Architecture*
Licensed under the Creative Commons Attribution-NonCommercial-ShareAlike License: http://creativecommons.org/licenses/by-nc-sa/2.0/

Question 11

ICANN. You sele

What organization is responsible for assigning IP address blocks to organizations?

Correct!

- ICANN
- UN
- IANA
- NIST
- US Government

Cody Buntain: Lecture Slides for *Technologies Infrastructure and Architecture*
Licensed under the Creative Commons Attribution-NonCommercial-ShareAlike License: http://creativecommons.org/licenses/by-nc-sa/2.0/

Question 12 1 / 1 pts

What protocol is used to assign hosts IP addresses, gateways, and DNS servers on joining a new network?

- DNS
- DHCP (Correct!)
- Administrators
- FTP

Cody Buntain: Lecture Slides for *Technologies Infrastructure and Architecture*
Licensed under the Creative Commons Attribution-NonCommercial-ShareAlike License: http://creativecommons.org/licenses/by-nc-sa/2.0/

Question 13 1 / 1 pts

What service is used to allow multiple devices to share a single IP address and Internet connection? (Hint: Used most often in residential homes and small offices)

- IPv6
- DHCP
- FTP
- NAT

Correct!

Cody Buntain: Lecture Slides for *Technologies Infrastructure and Architecture*
Licensed under the Creative Commons Attribution-NonCommercial-ShareAlike License: http://creativecommons.org/licenses/by-nc-sa/2.0/

Question 14

1 / 1 pts

Select the three private IP CIDR subnets.

Correct!

- [x] 10.0.0.0/8
- [ ] 10.0.0.0/16

Correct!

- [x] 192.168.0.0/16
- [ ] 192.168.100.0/24

Correct!

- [x] 172.16.0.0/12

Cody Buntain: Lecture Slides for *Technologies Infrastructure and Architecture*
Licensed under the Creative Commons Attribution-NonCommercial-ShareAlike License: http://creativecommons.org/licenses/by-nc-sa/2.0/

Question 15 1 / 1 pts

Network address translation makes it difficult for peer-to-peer connections to traverse private networks.

Correct!

- (•) True
- ( ) False

Cody Buntain: Lecture Slides for *Technologies Infrastructure and Architecture*
Licensed under the Creative Commons Attribution-NonCommercial-ShareAlike License: http://creativecommons.org/licenses/by-nc-sa/2.0/

Question 16

1 / 1 pts

Network address translation uses external IP addresses and port numbers to map internal clients to external connections.

Answer 1:

Correct! External

Correct Answer Public

Answer 2:

Correct! Port

Cody Buntain: Lecture Slides for *Technologies Infrastructure and Architecture*
Licensed under the Creative Commons Attribution-NonCommercial-ShareAlike License: http://creativecommons.org/licenses/by-nc-sa/2.0/

Question 17

1 / 1 pts

Match the IP address space to the protocol version.

Correct!

128 bits — IPv6

Correct!

32 bits — IPv4

Other Incorrect Match Options:

- 6 bits
- 4 bits
- 16 bits

Cody Buntain: Lecture Slides for *Technologies Infrastructure and Architecture*
Licensed under the Creative Commons Attribution-NonCommercial-ShareAlike License: http://creativecommons.org/licenses/by-nc-sa/2.0/

Question 18

1 / 1 pts

Select ways in which IPv4 and IPv6 differ.

Correct! ☑ Fragmentation support

Correct! ☑ Static header sizes

☐ Wider Internet diameter

Correct! ☑ Different address space sizes

☐ More transport protocol support

Cody Buntain: Lecture Slides for *Technologies Infrastructure and Architecture*
Licensed under the Creative Commons Attribution-NonCommercial-ShareAlike License: http://creativecommons.org/licenses/by-nc-sa/2.0/

Question 19

1 / 1 pts

IPv4 and IPv6 can coexist through what process:

Correct!

- (•) Tunneling
- ( ) Router conversions
- ( ) VPNs

Cody Buntain: Lecture Slides for *Technologies Infrastructure and Architecture*
Licensed under the Creative Commons Attribution-NonCommercial-ShareAlike License: http://creativecommons.org/licenses/by-nc-sa/2.0/

Question 20 1 / 1 pts

Class-ful addressing was abandoned for CIDR addressing because:

- To support larger IP blocks
- IP address depletion
- IP block depletion

Correct!

Cody Buntain: Lecture Slides for *Technologies Infrastructure and Architecture*
Licensed under the Creative Commons Attribution-NonCommercial-ShareAlike License: http://creativecommons.org/licenses/by-nc-sa/2.0/

IP Addressing

Licensed under the Creative Commons Attribution-NonCommercial-ShareAlike License: http://creativecommons.org/licenses/by-nc-sa/2.0/

Internet Protocol Addressing

- Have mentioned a host's "**IP address**" several times
  - What is its purpose?
  - What is its format?
  - How is it used?
  - How is it assigned?

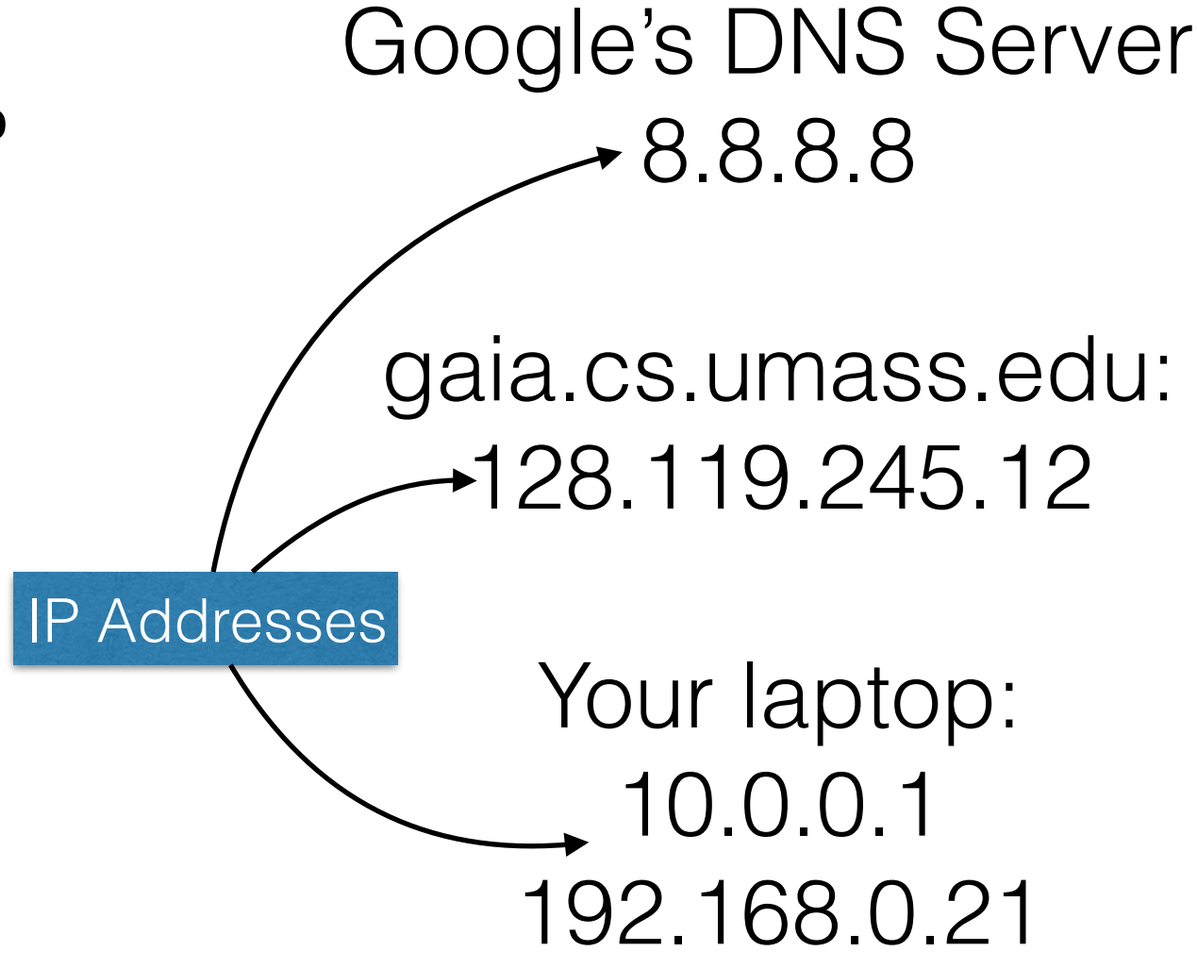

Licensed under the Creative Commons Attribution-NonCommercial-ShareAlike License: http://creativecommons.org/licenses/by-nc-sa/2.0/

IP Addressing

- Wh
  - C cular
    I
- All t
  ha

Licensed under the Creative Commons Attribution-NonCommercial-ShareAlike License: http://creativecommons.org/licenses/by-nc-sa/2.0/

IP Addressing

- IP address forma
  - Each octet is i
- IP address range
  - 0.0.0.0 - 255.255.255.255
- Can uniquely address ~4.3 billion devices

Licensed under the Creative Commons Attribution-NonCommercial-ShareAlike License: http://creativecommons.org/licenses/by-nc-sa/2.0/

IP Addressing

- How are IP addresses used?
  - Addressing remote hosts (obvious)
  - Routing packets through the network
    - We'll see more about this later
  - Also hints at **relations** among devices

Licensed under the Creative Commons Attribution-NonCommercial-ShareAlike License: http://creativecommons.org/licenses/by-nc-sa/2.0/

IP Addressing

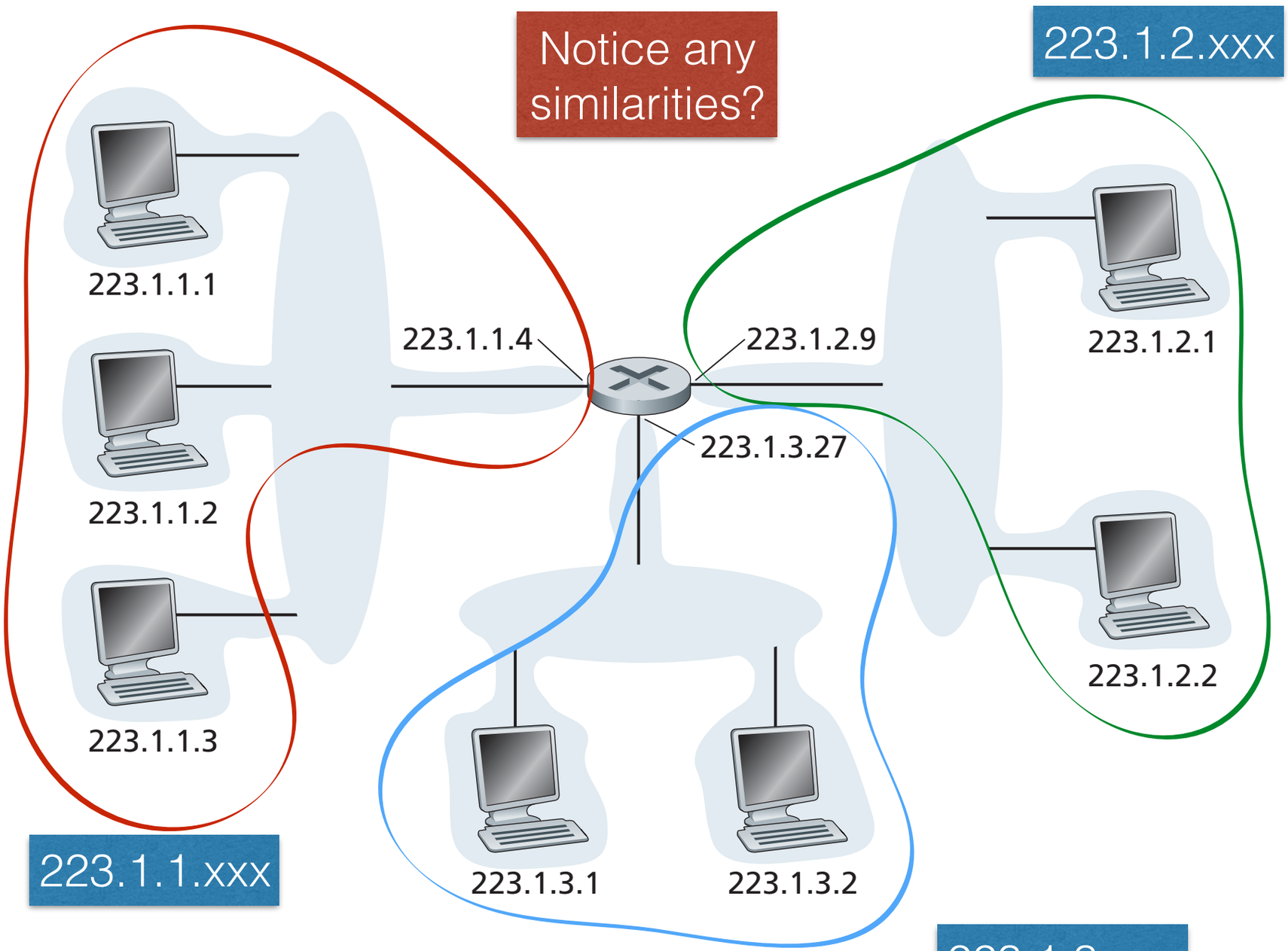

Cody Buntain: Lecture Slides for *Technologies Infrastructure and Architecture*
Licensed under the Creative Commons Attribution-NonCommercial-ShareAlike License: http://creativecommons.org/licenses/by-nc-sa/2.0/

IP Addressing

- Groups of same-prefixed devices are called **subnets**
- Three subnets here:
  - 223.1.1.x
  - 223.1.2.x
  - 223.1.3.x

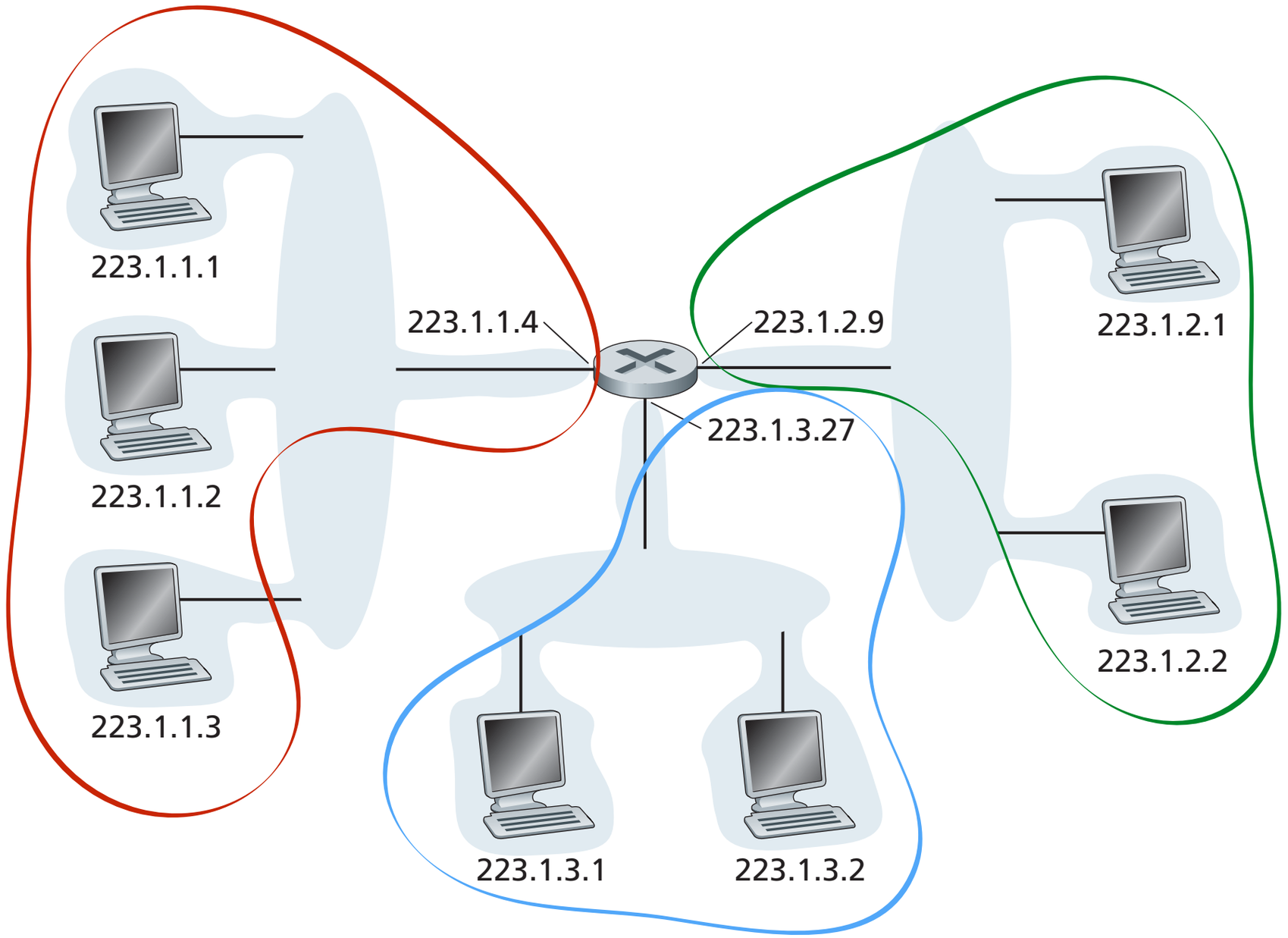

Cody Buntain: Lecture Slides for *Technologies Infrastructure and Architecture*
Licensed under the Creative Commons Attribution-NonCommercial-ShareAlike License: http://creativecommons.org/licenses/by-nc-sa/2.0/

IP Addressing

- What are **subnets**?
- Composed of adjacent hosts that can **communicate directly without a router**
- I.e., two machines on the same subnet do **not** need a router to forward packets to each other

Licensed under the Creative Commons Attribution-NonCommercial-ShareAlike License: http://creativecommons.org/licenses/by-nc-sa/2.0/

IP Addressing

Same subnet

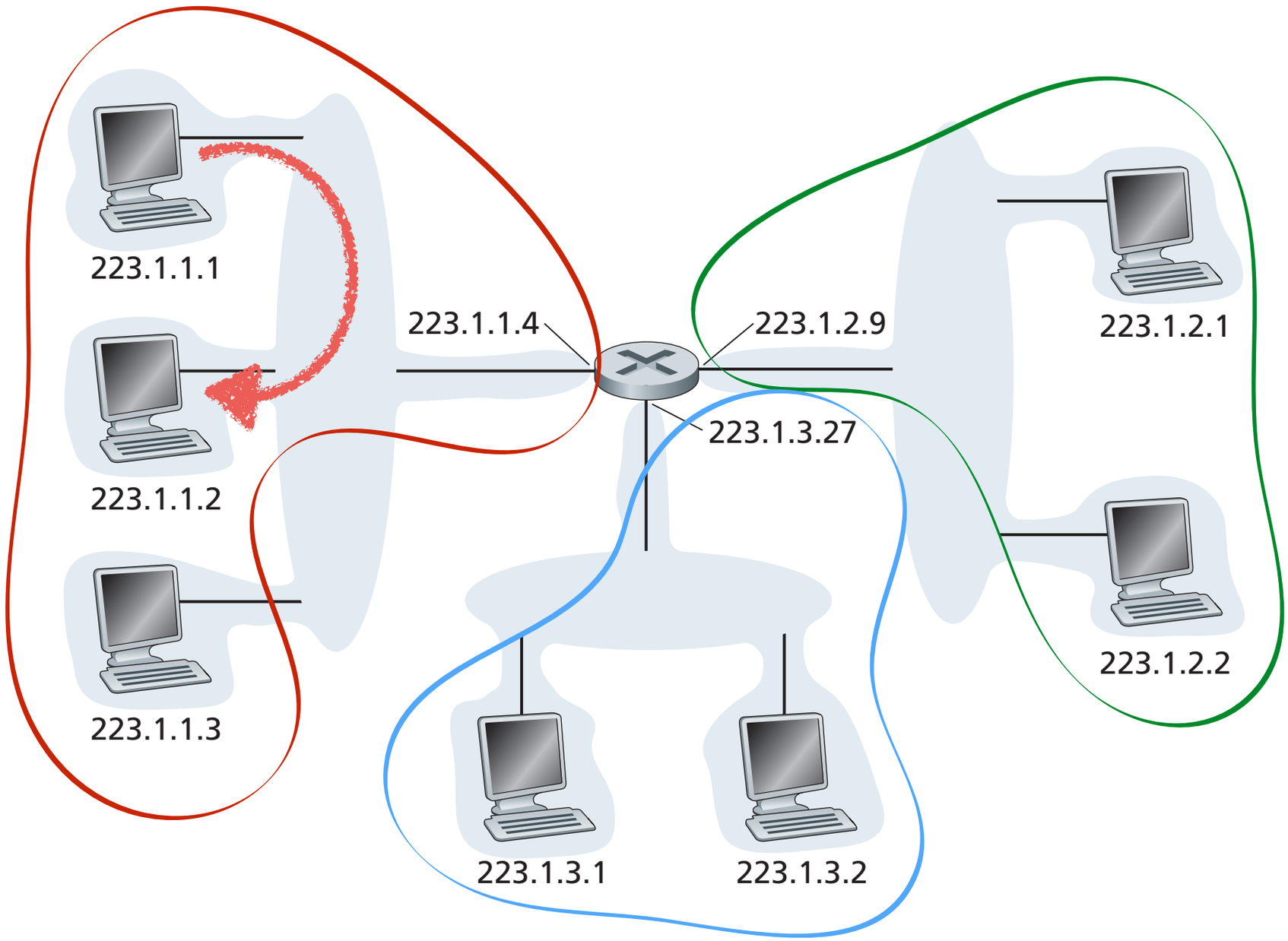

Cody Buntain: Lecture Slides for *Technologies Infrastructure and Architecture*
Licensed under the Creative Commons Attribution-NonCommercial-ShareAlike License: http://creativecommons.org/licenses/by-nc-sa/2.0/

IP Addressing

Different subnet

Note router traversal

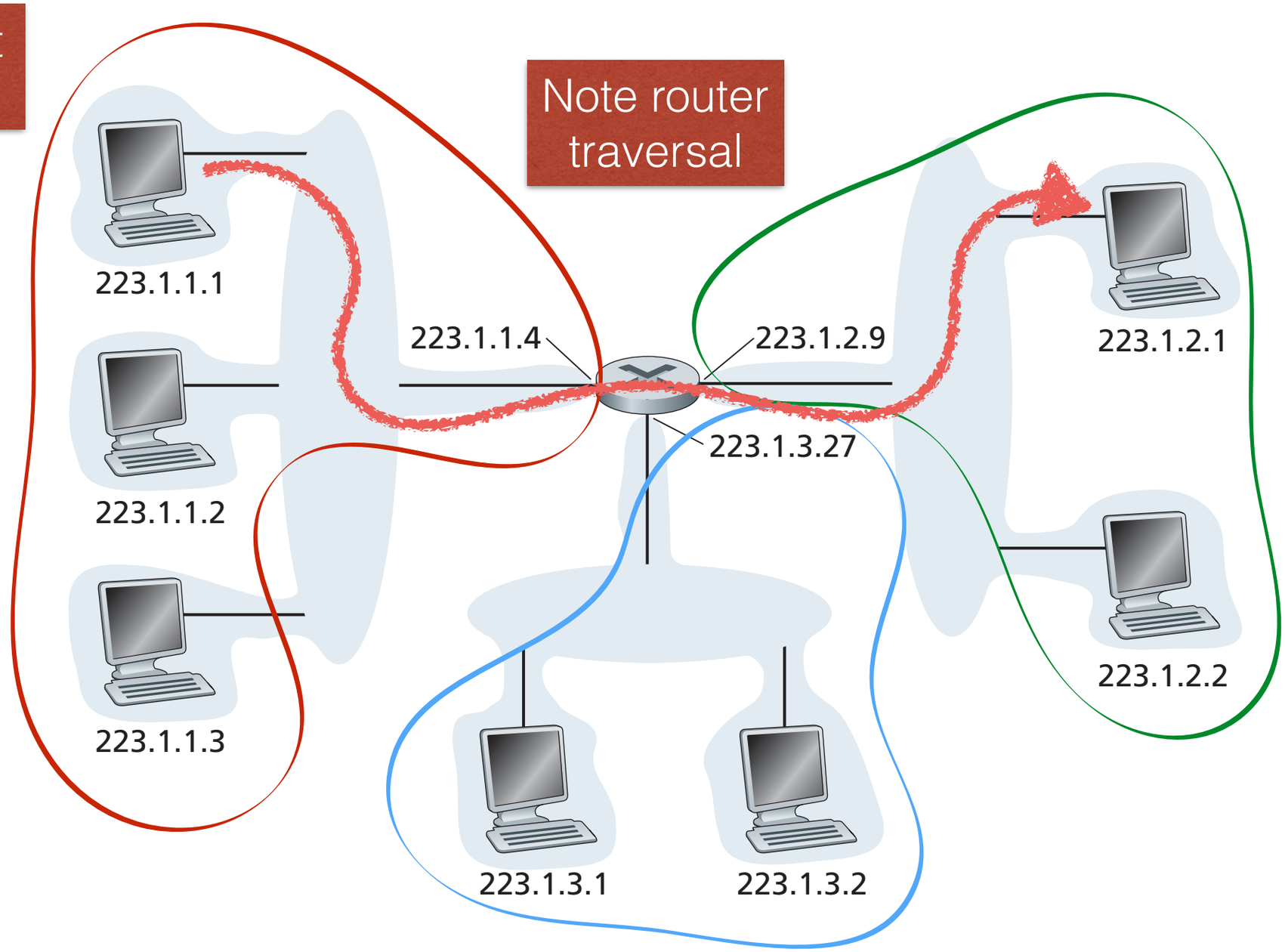

Cody Buntain: Lecture Slides for *Technologies Infrastructure and Architecture*
Licensed under the Creative Commons Attribution-NonCommercial-ShareAlike License: http://creativecommons.org/licenses/by-nc-sa/2.0/

IP Addressing

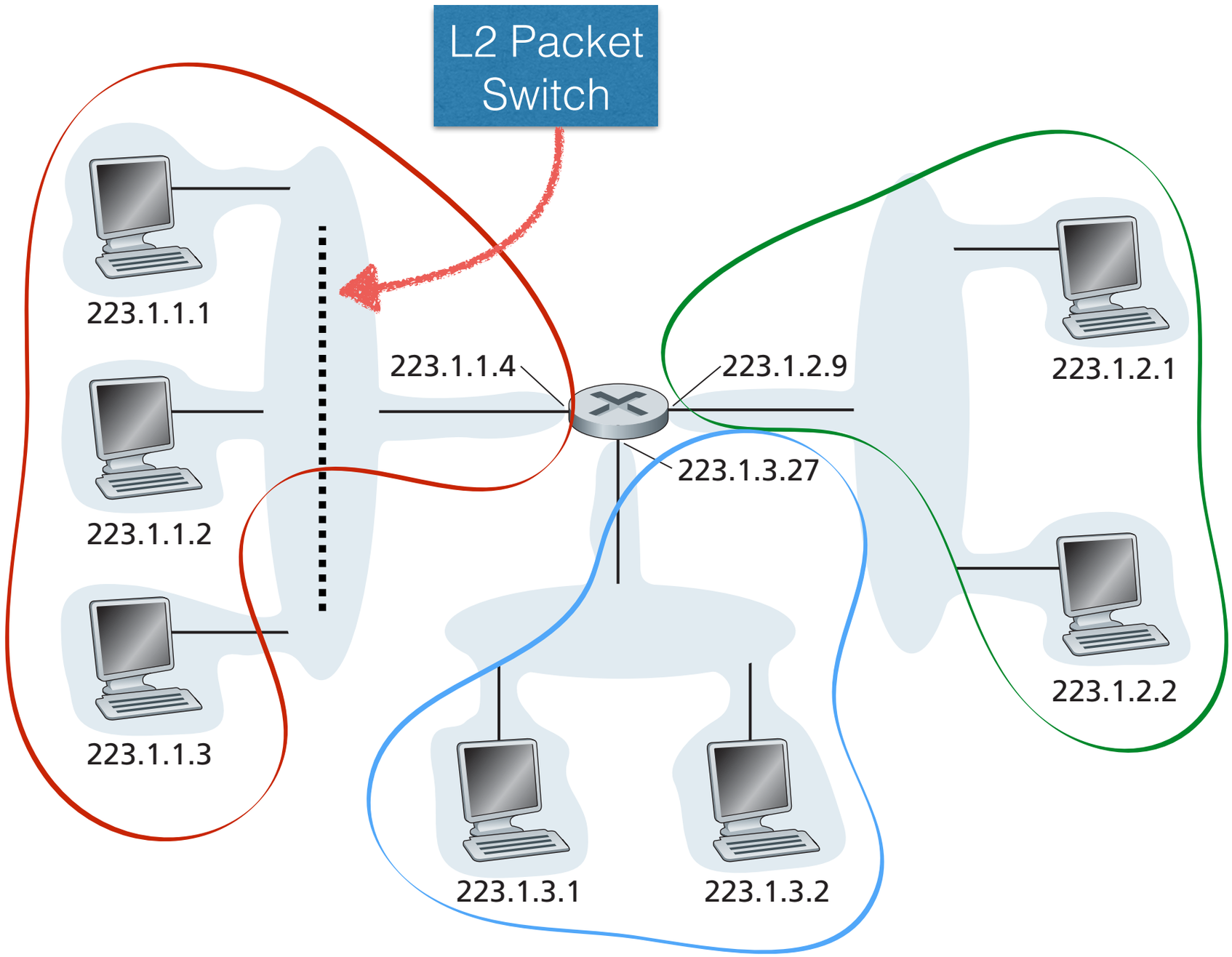

Cody Buntain: Lecture Slides for *Technologies Infrastructure and Architecture*
Licensed under the Creative Commons Attribution-NonCommercial-ShareAlike License: http://creativecommons.org/licenses/by-nc-sa/2.0/

IP Addressing

- How do we **describe subnets**?
  - By the number of **left-most bits** in a set of IP addresses **that are the same**
  - I.e., a block of IP addresses of the form **a.b.c.d** with **x** left-most bits shared
  - Written as **a.b.c.d/x** where **a.b.c.d** is the lowest IP address in the range

Licensed under the Creative Commons Attribution-NonCommercial-ShareAlike License: http://creativecommons.org/licenses/by-nc-sa/2.0/

IP Addressing

- Possible subnets:
  - 223.1.1.0/24
  - 223.1.2.0/24
  - 223.1.3.0/24

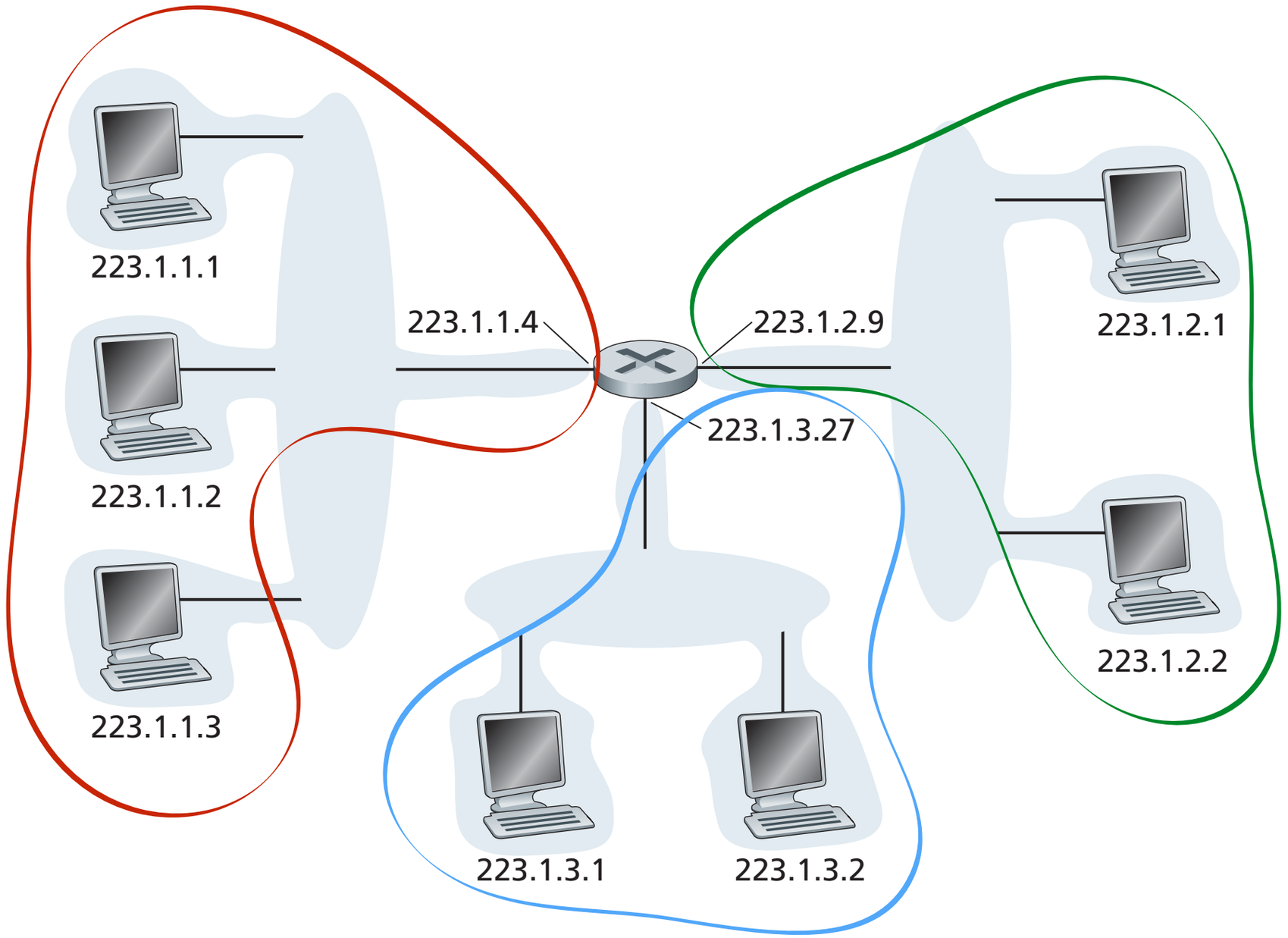

Licensed under the Creative Commons Attribution-NonCommercial-ShareAlike License: http://creativecommons.org/licenses/by-nc-sa/2.0/

IP Addressing

- Another possible subnet:
  - 223.1.0.0/16
- It's possible to have nested subnets

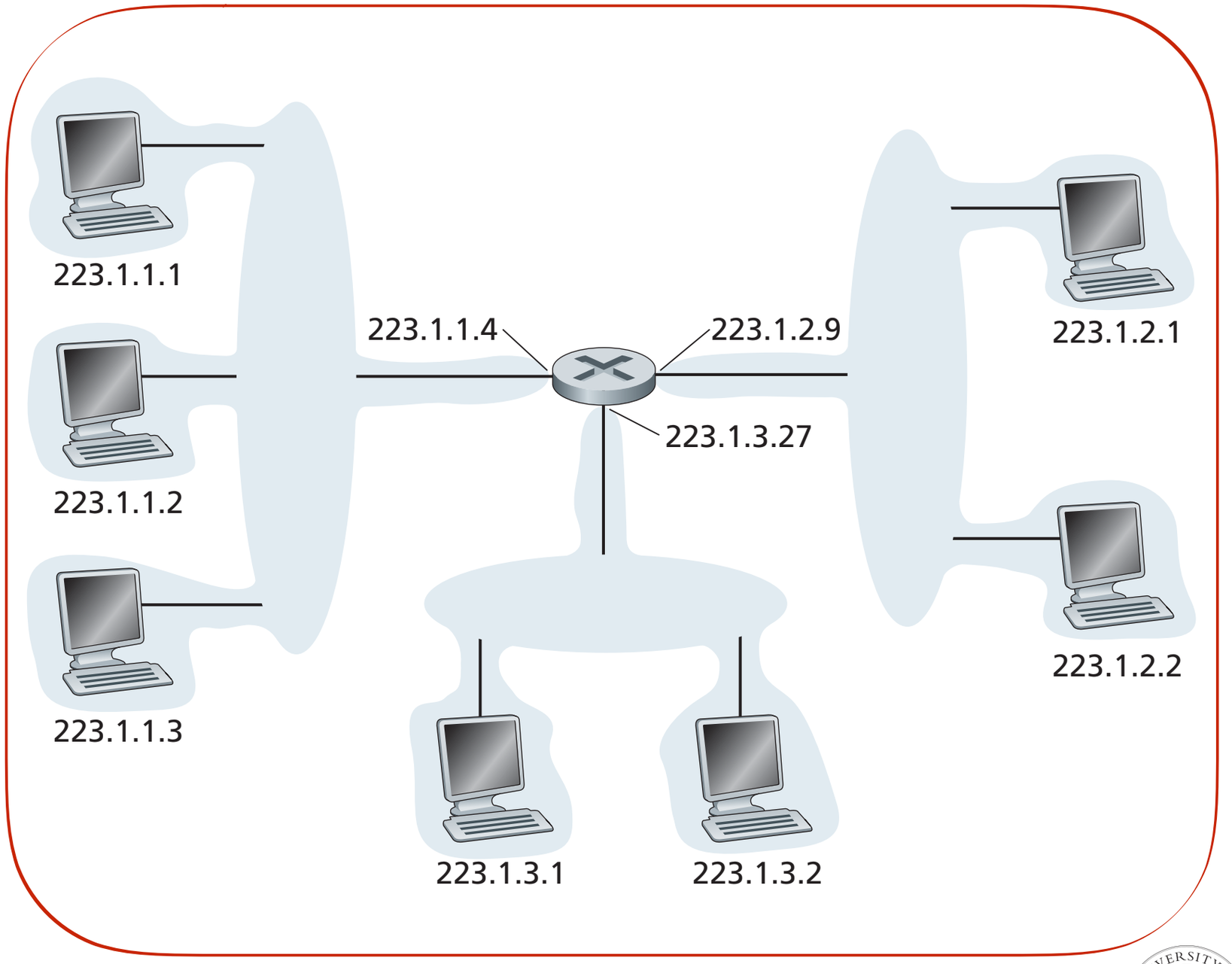

Licensed under the Creative Commons Attribution-NonCommercial-ShareAlike License: http://creativecommons.org/licenses/by-nc-sa/2.0/

IP Addressing

- The x in a.b.c.d/x is referred to as the **subnet mask**
  - Masks off the subnet's variable bits
  - Often shown in dotted-decimal format as well
    - Subnet mask a.b.c.d/24 = 255.255.255.0

Licensed under the Creative Commons Attribution-NonCommercial-ShareAlike License: http://creativecommons.org/licenses/by-nc-sa/2.0/

IP Addressing

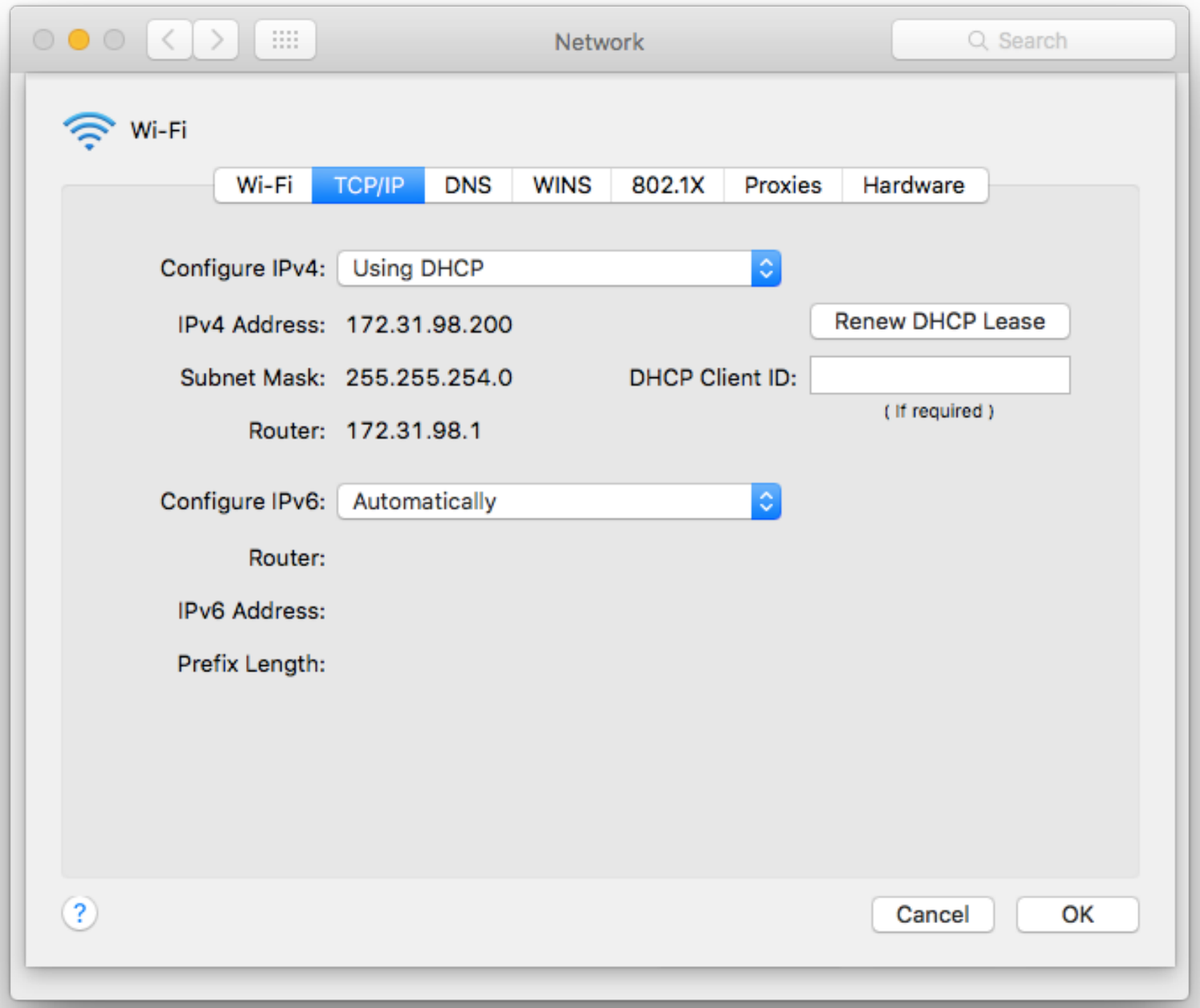

Licensed under the Creative Commons Attribution-NonCommercial-ShareAlike License: http://creativecommons.org/licenses/by-nc-sa/2.0/

IP Addressing

Identifying the **Subnet:**

172.031.099.200 ← IP Address

& 255.255.254.000 ← Subnet Mask

172.031.098.000 ← Subnet

Licensed under the Creative Commons Attribution-NonCommercial-ShareAlike License: http://creativecommons.org/licenses/by-nc-sa/2.0/

IP Addressing

Identifying the **Range** of the Subnet:

Subnet 172.031.098.000

Subnet Mask 255.255.254.000 = 172.31.98.0/23

32 - 23 = 9 bits for intra-subnet addressing

0.0.0-1.0-255 possible addresses

Range 172.31.98.0 - 172.31.99.255

Licensed under the Creative Commons Attribution-NonCommercial-ShareAlike License: http://creativecommons.org/licenses/by-nc-sa/2.0/

Questions about subnets?

Licensed under the Creative Commons Attribution-NonCommercial-ShareAlike License: http://creativecommons.org/licenses/by-nc-sa/2.0/

IP Addressing

- How are IP addresses **assigned**?
- Two ways:
  - Manually
  - Automatically

Licensed under the Creative Commons Attribution-NonCommercial-ShareAlike License: http://creativecommons.org/licenses/by-nc-sa/2.0/

IP Addressing

- **Manual** IP assignment:
  - Ask someone for the settings for your network
    - The IP address, subnet mask, and default gateway/router
    - Often also includes primary and secondary DNS servers
- Manually enter information into your computer

Licensed under the Creative Commons Attribution-NonCommercial-ShareAlike License: http://creativecommons.org/licenses/by-nc-sa/2.0/

IP Addressing

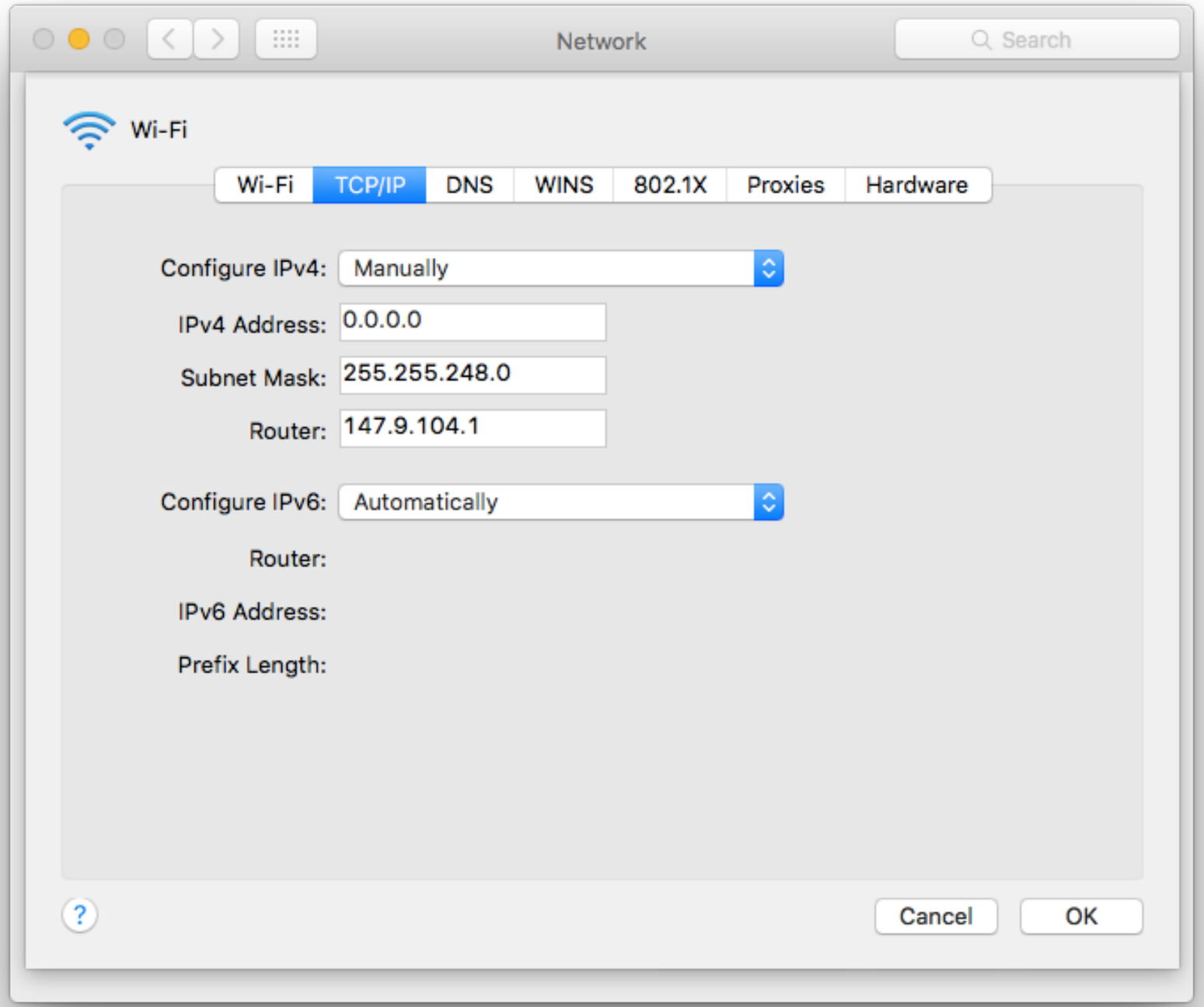

Licensed under the Creative Commons Attribution-NonCommercial-ShareAlike License: http://creativecommons.org/licenses/by-nc-sa/2.0/

IP Addressing

- **Automatic** IP assignment:
  - The **D**ynamic **H**ost **C**onfig **P**rotocol (DHCP)
    - The DHCP server runs a UDP-based service on the network
      - New system attaches to network and asks the DHCP server for the proper configuration
      - DHCP server sends config info with IP, subnet, DNS, etc.

Licensed under the Creative Commons Attribution-NonCommercial-ShareAlike License: http://creativecommons.org/licenses/by-nc-sa/2.0/

IP Addressing

- Question about DHCP:
  - How does the new system know the DHCP server's address to direct the request?
- Answer: it doesn't.
  - Remember, **broadcast** addresses let us send a message to **all** attached devices

Licensed under the Creative Commons Attribution-NonCommercial-ShareAlike License: http://creativecommons.org/licenses/by-nc-sa/2.0/

IP Addressing

- DHCP interaction:
  - Client arrives
  - Client broadcasts a DHCP discover packet by sending to 255.255.255.255
  - DHCP server receives broadcast packet and broadcasts a response with a possible IP to use
  - Client receives IP response and requests a specific config
  - DHCP server acknowledges request
  - Configuration is complete!

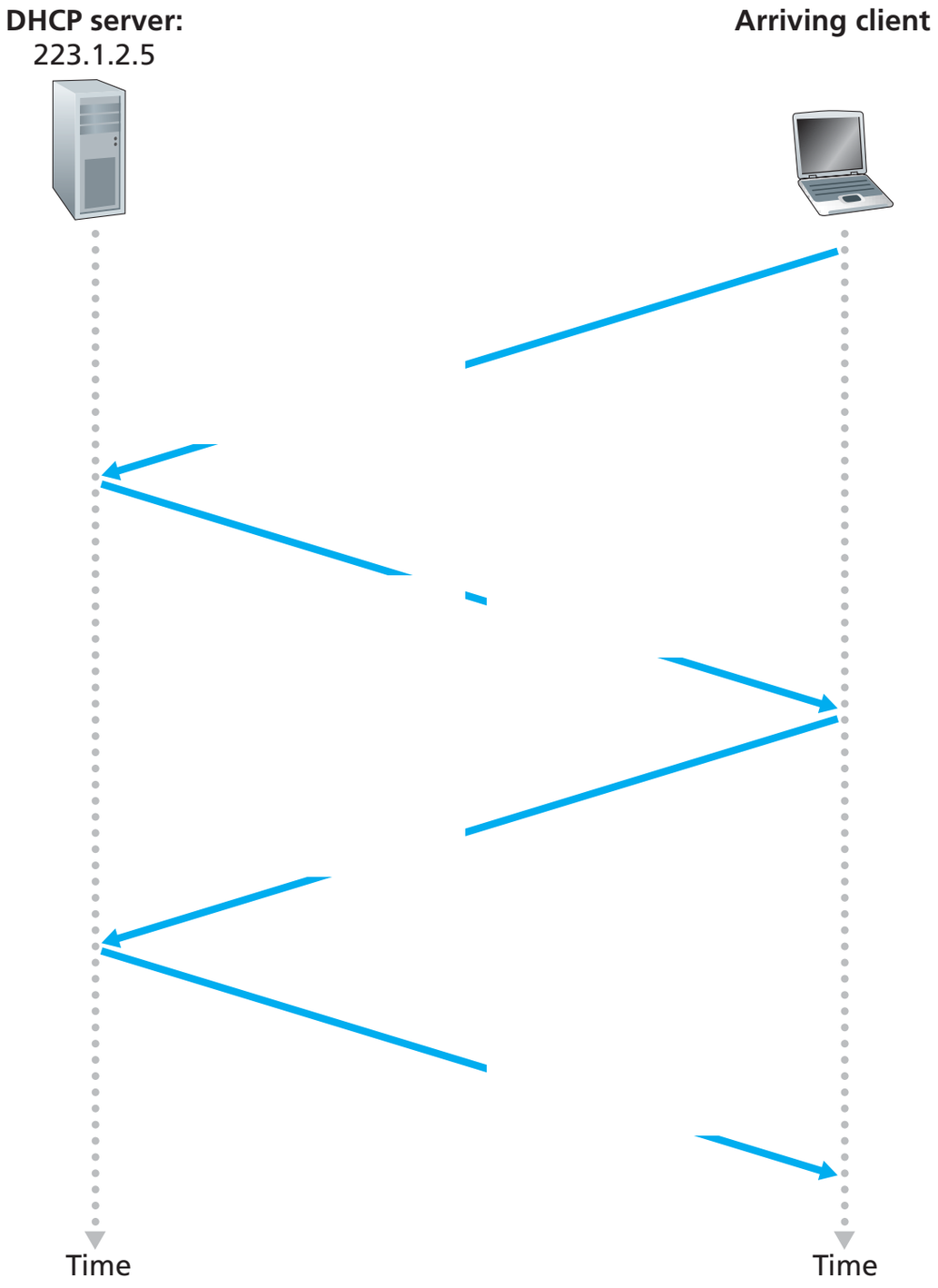

Cody Buntain: Lecture Slides for *Technologies Infrastructure and Architecture*
Licensed under the Creative Commons Attribution-NonCommercial-ShareAlike License: http://creativecommons.org/licenses/by-nc-sa/2.0/

IP Addressing

- Open question:
  - Where does the network administrator get IP addresses to assign?
  - IANA.org / ICANN and registrars
  - Companies purchase blocks of IP addresses

Licensed under the Creative Commons Attribution-NonCommercial-ShareAlike License: http://creativecommons.org/licenses/by-nc-sa/2.0/

Questions about IP assignment?

Licensed under the Creative Commons Attribution-NonCommercial-ShareAlike License: http://creativecommons.org/licenses/by-nc-sa/2.0/

IP Addressing

- UMD has several IP address ranges
- IPv4
  - 65.127.220.0 - 65.127.221.255
  - 128.8.0.0 - 128.8.255.255
  - 129.2.0.0 - 129.2.255.255
  - 192.54.94.0 - 192.54.103.255
  - 199.7.91.0 - 199.7.91.255
  - 206.196.160.0 - 206.196.191.255
- IPv6
  - 2001:468:C00:: - 2001:468:CFF:FFFF:FFFF:FFFF:FFFF:FFFF
  - 2001:500:2D:: - 2001:500:2D:FFFF:FFFF:FFFF:FFFF:FFFF
  - 2605:880:: - 2605:880:FFFF:FFFF:FFFF:FFFF:FFFF:FFFF
  - 2620:50:: - 2620:50:F:FFFF:FFFF:FFFF:FFFF:FFFF

Licensed under the Creative Commons Attribution-NonCommercial-ShareAlike License: http://creativecommons.org/licenses/by-nc-sa/2.0/

MAP OF THE INTERNET

THE IPv4 SPACE, 2006

THIS CHART SHOWS THE IP ADDRESS SPACE ON A PLANE USING A FRACTAL MAPPING WHICH PRESERVES GROUPING -- ANY CONSECUTIVE STRING OF IPs WILL TRANSLATE TO A SINGLE COMPACT, CONTIGUOUS REGION ON THE MAP. EACH OF THE 256 NUMBERED BLOCKS REPRESENTS ONE /8 SUBNET (CONTAINING ALL IPs THAT START WITH THAT NUMBER). THE UPPER LEFT SECTION SHOWS THE BLOCKS SOLD DIRECTLY TO CORPORATIONS AND GOVERNMENTS IN THE 1990's BEFORE THE RIRs TOOK OVER ALLOCATION.

0 1 14 15 16 19 →
3 2 13 12 17 18
4 7 8 11
5 6 9 10

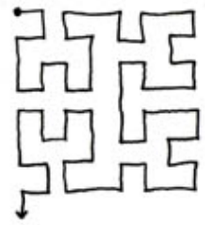

= UNALLOCATED BLOCK

Cody Buntain: Lecture Slides for *Technologies Infrastructure and Architecture*
Licensed under the Creative Commons Attribution-NonCommercial-ShareAlike License: http://creativecommons.org/licenses/by-nc-sa/2.0/

Questions about IP allocation?

Licensed under the Creative Commons Attribution-NonCommercial-ShareAlike License: http://creativecommons.org/licenses/by-nc-sa/2.0/

Aside: CIDR and Classful Addressing

- **a.b.c.d/x** format for describing subnets is called:
  - **C**lassless **I**nter-**D**omain **R**outing
- As opposed to Classful Addressing:
  - Class A: a.b.c.d/8 - ~17 million addresses per network
  - Class B: a.b.c.d/16 - ~16k addresses per network
  - Class C: a.b.c.d/24 - 256 addresses per network
  - Not very efficient for small-medium companies

Licensed under the Creative Commons Attribution-NonCommercial-ShareAlike License: http://creativecommons.org/licenses/by-nc-sa/2.0/

Aside: TCP vs. UDP

- When is UDP used?
  - For network control (DHCP, DNS, SNMP, etc.)
  - For broadcast traffic
  - TCP is point-to-point, cannot open a stream with multiple simultaneous hosts
  - UDP is necessary here
  - Thought exercise: what happens if you try to initiate a TCP connection with broadcast address?

Licensed under the Creative Commons Attribution-NonCommercial-ShareAlike License: http://creativecommons.org/licenses/by-nc-sa/2.0/

The Internet Protocol

Licensed under the Creative Commons Attribution-NonCommercial-ShareAlike License: http://creativecommons.org/licenses/by-nc-sa/2.0/

The Internet Protocol

- Talked about IP datagrams
- What all is in a datagram?
    - IPv4 has a 20-byte header
        - Source/dest addresses
        - Datagram length
        - Options, flags, etc.
- Then up to MTU-20 bytes of transport segment data

Licensed under the Creative Commons Attribution-NonCommercial-ShareAlike License: http://creativecommons.org/licenses/by-nc-sa/2.0/

The Internet Protocol

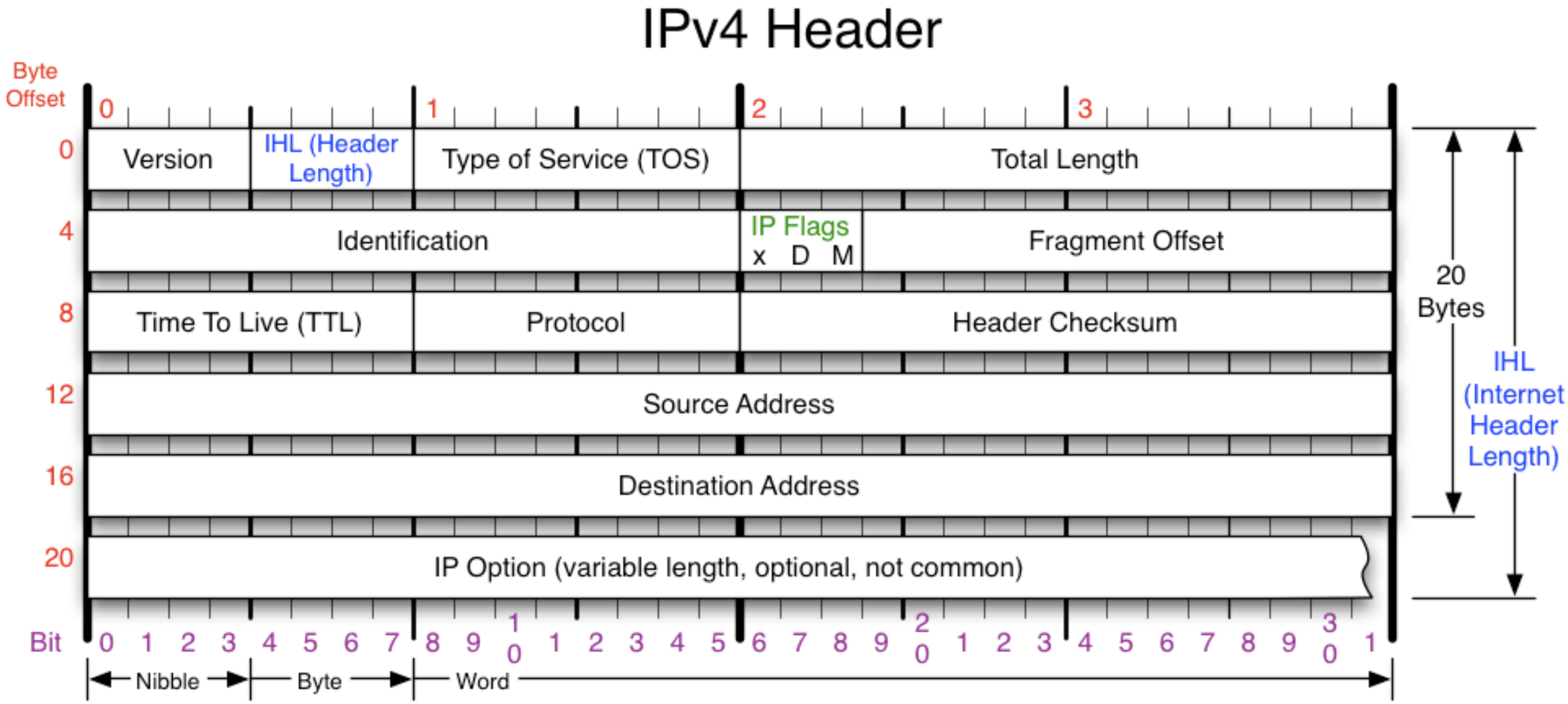

Licensed under the Creative Commons Attribution-NonCommercial-ShareAlike License: http://creativecommons.org/licenses/by-nc-sa/2.0/

The Internet Protocol

IPv4 or IPv6

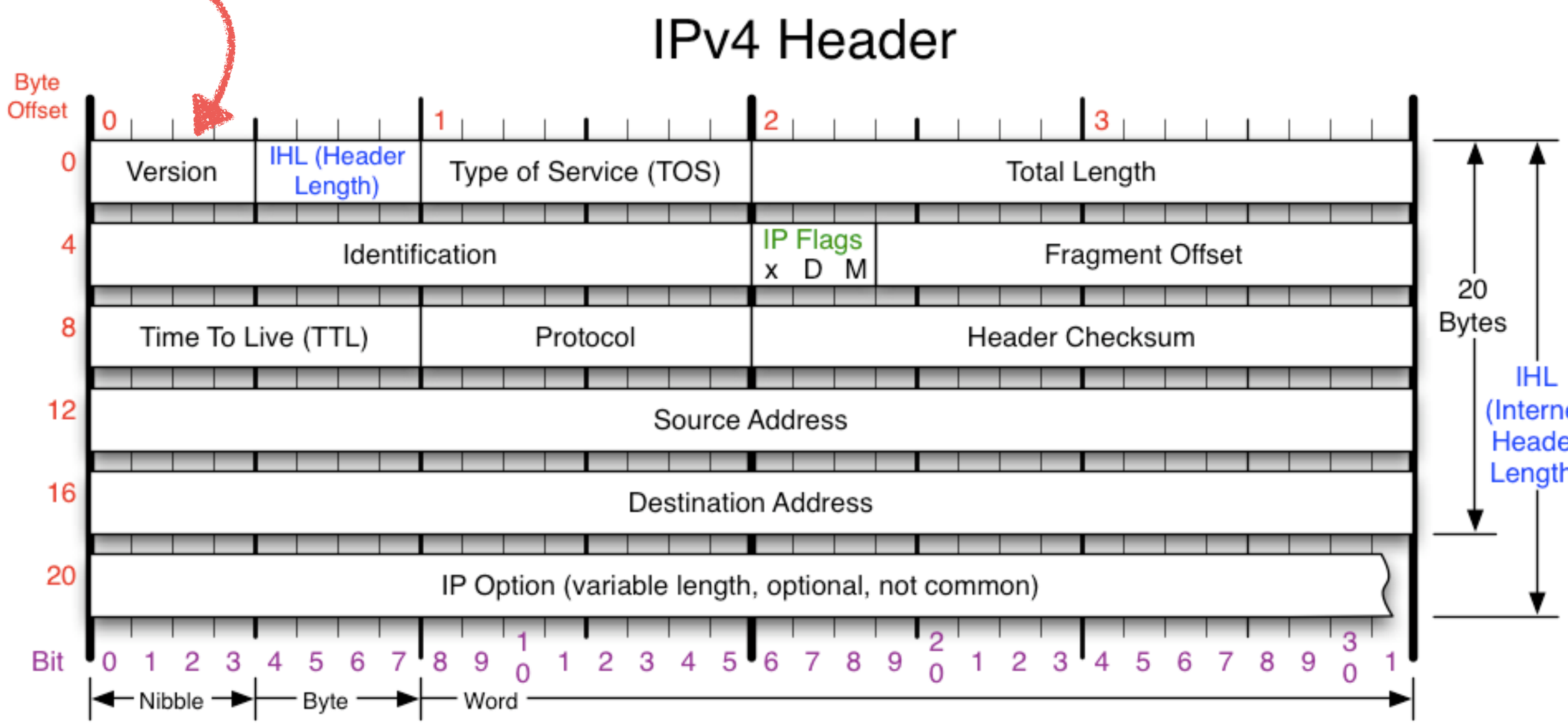

Licensed under the Creative Commons Attribution-NonCommercial-ShareAlike License: http://creativecommons.org/licenses/by-nc-sa/2.0/

The Internet Protocol

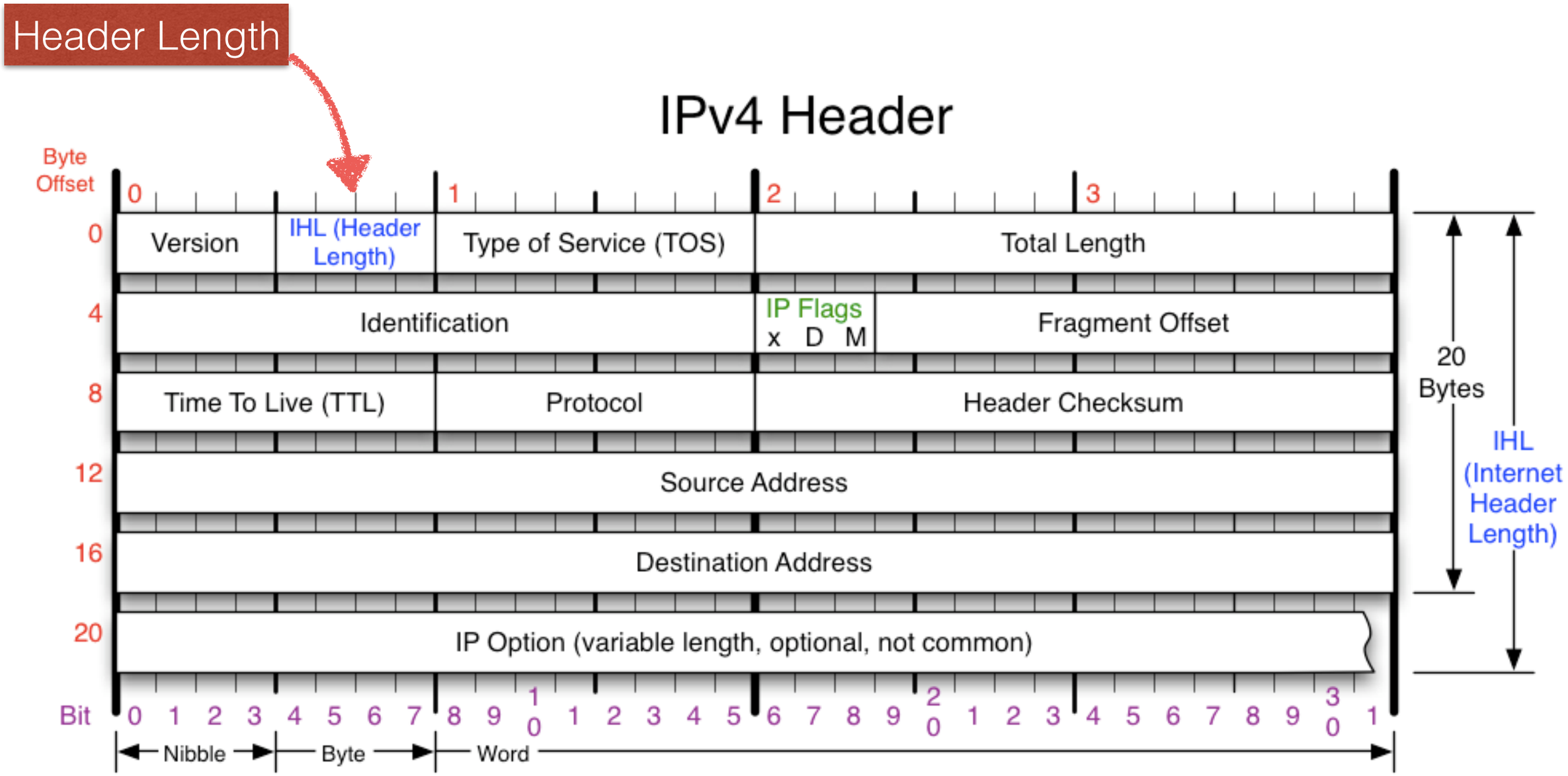

Licensed under the Creative Commons Attribution-NonCommercial-ShareAlike License: http://creativecommons.org/licenses/by-nc-sa/2.0/

The Internet Protocol

Is this real-time traffic? QoS

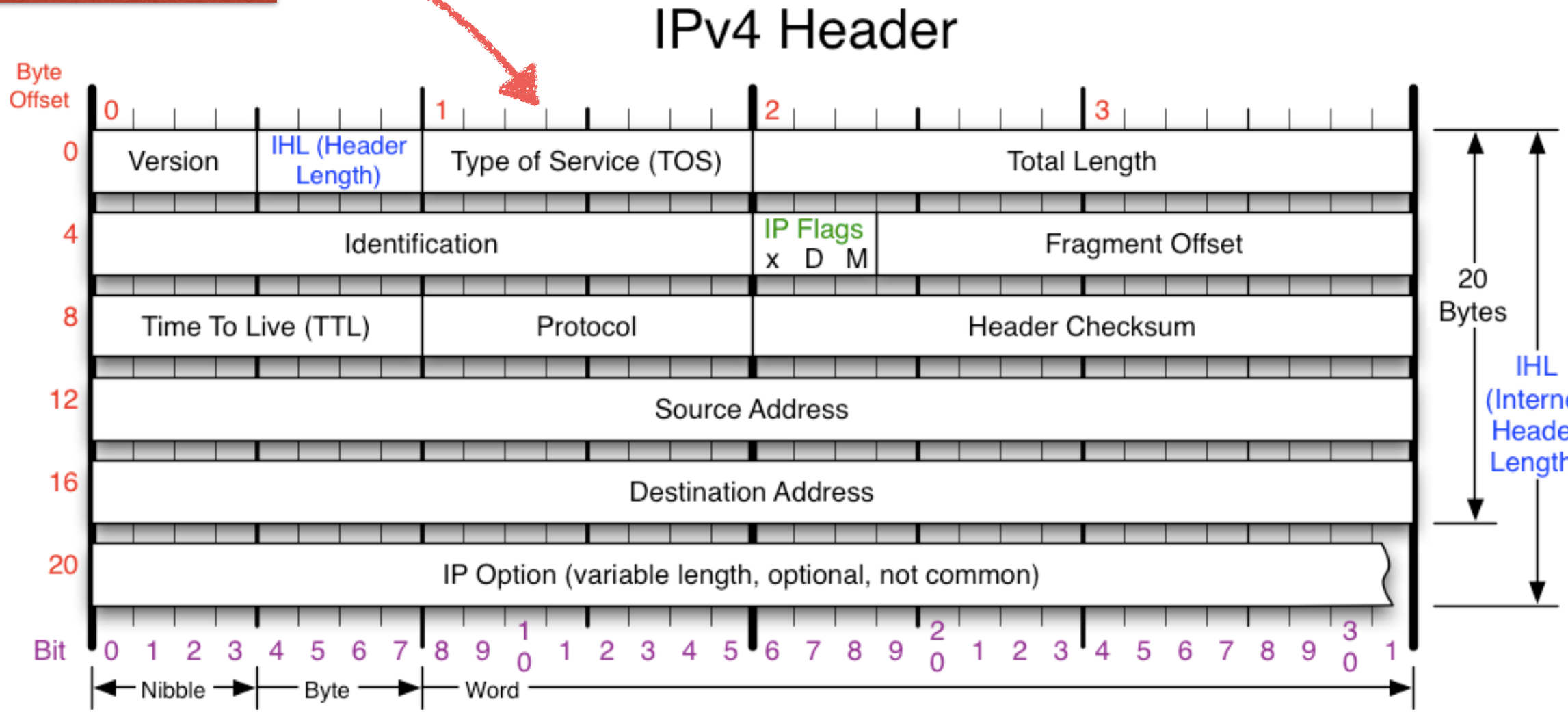

Licensed under the Creative Commons Attribution-NonCommercial-ShareAlike License: http://creativecommons.org/licenses/by-nc-sa/2.0/

The Internet Protocol

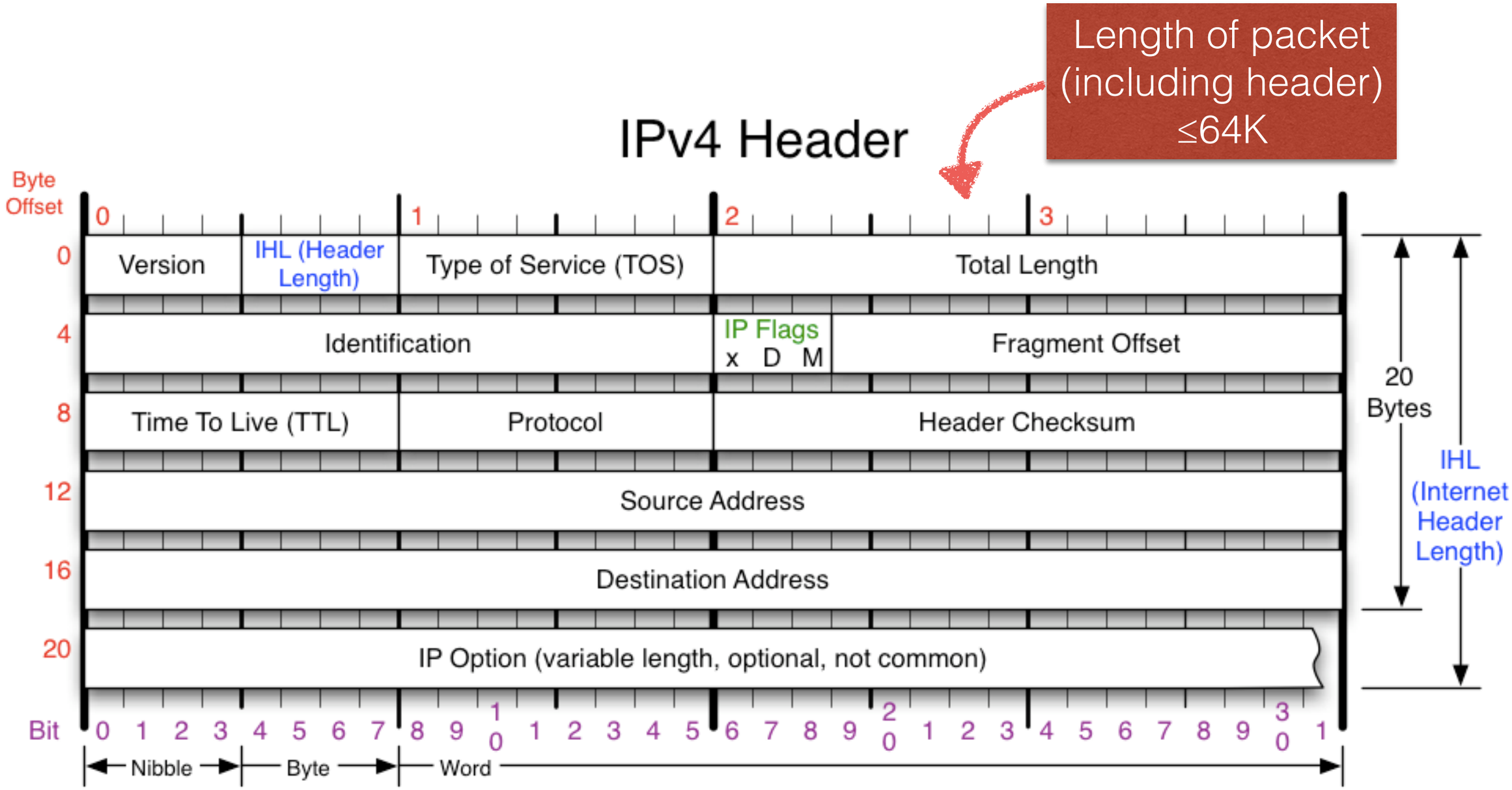

Licensed under the Creative Commons Attribution-NonCommercial-ShareAlike License: http://creativecommons.org/licenses/by-nc-sa/2.0/

The Internet Protocol

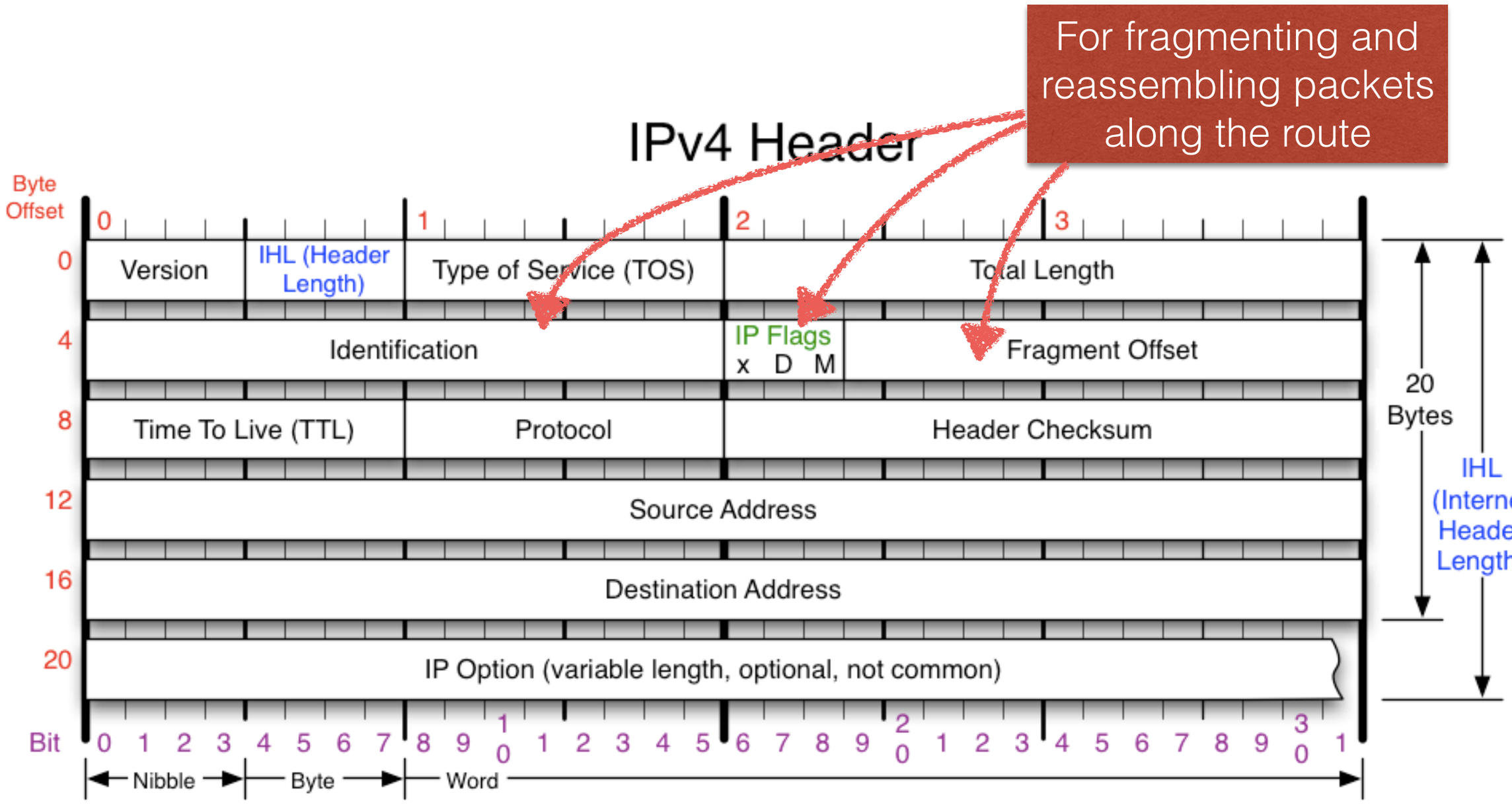

Licensed under the Creative Commons Attribution-NonCommercial-ShareAlike License: http://creativecommons.org/licenses/by-nc-sa/2.0/

The Internet Protocol

Number of routers
the packet can traverse
(decremented by each router)

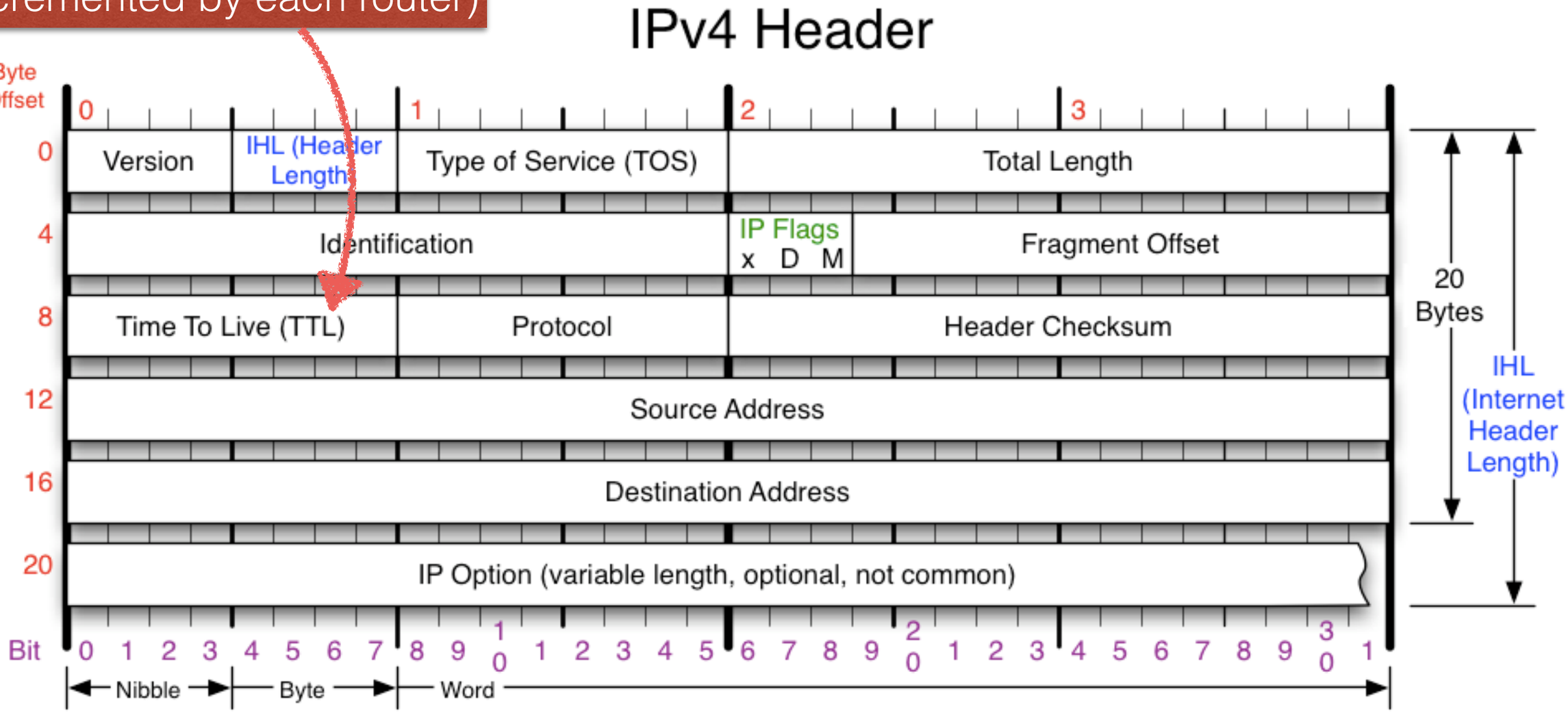

Licensed under the Creative Commons Attribution-NonCommercial-ShareAlike License: http://creativecommons.org/licenses/by-nc-sa/2.0/

The Internet Protocol

- What is the purpose of the TTL field?
  - TTL is decremented by 1 at each router
  - At TTL=0, drop the packet, and send error msg
  - Recall traceroute, which uses increasing TTLs to trace network path
  - **Consequence**: No path can be longer than 256 hops

Licensed under the Creative Commons Attribution-NonCommercial-ShareAlike License: http://creativecommons.org/licenses/by-nc-sa/2.0/

The Internet Protocol

Network/transport protocol information (TCP, UDP, ICMP, etc.)

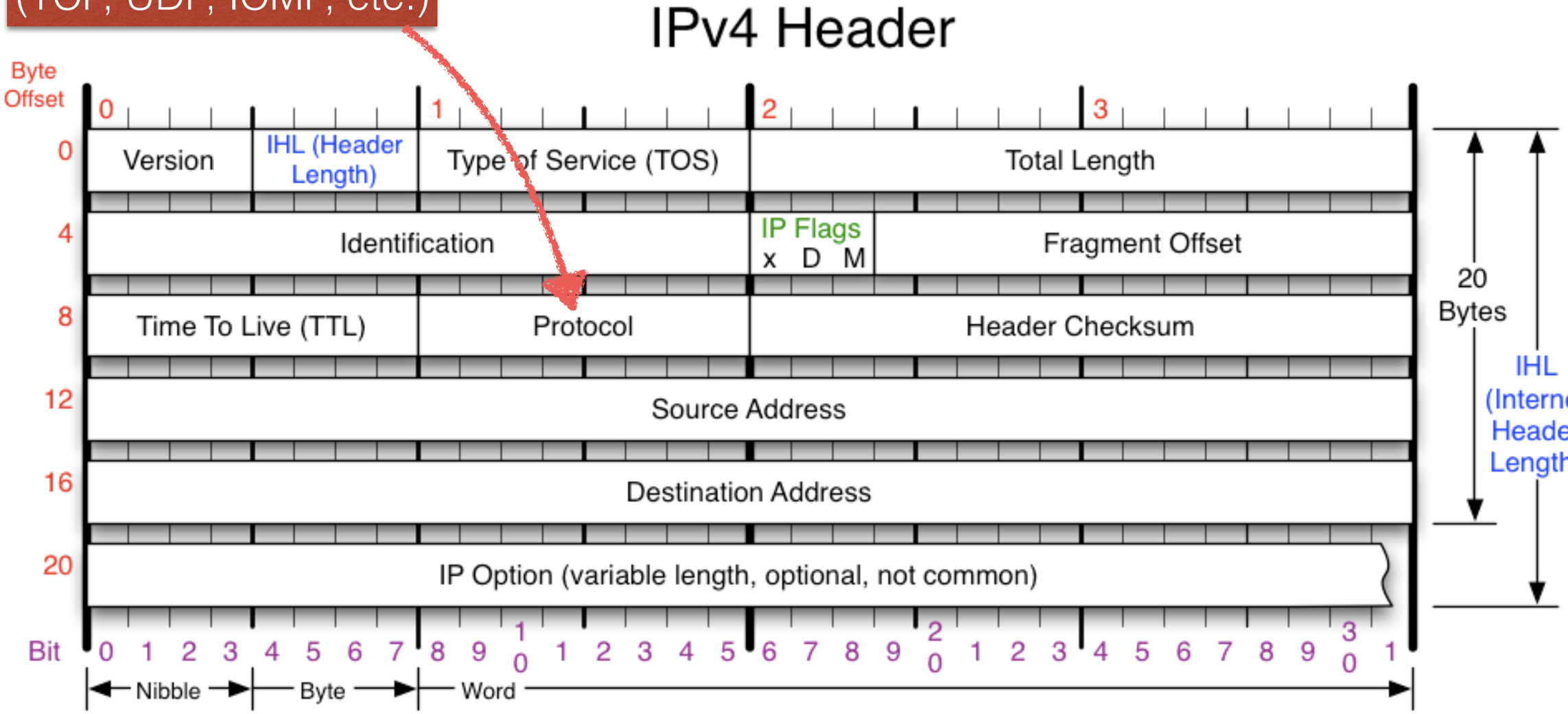

Cody Buntain: Lecture Slides for *Technologies Infrastructure and Architecture*
Licensed under the Creative Commons Attribution-NonCommercial-ShareAlike License: http://creativecommons.org/licenses/by-nc-sa/2.0/

The Internet Protocol

More error detection via checksum (similar to TCP/UDP)

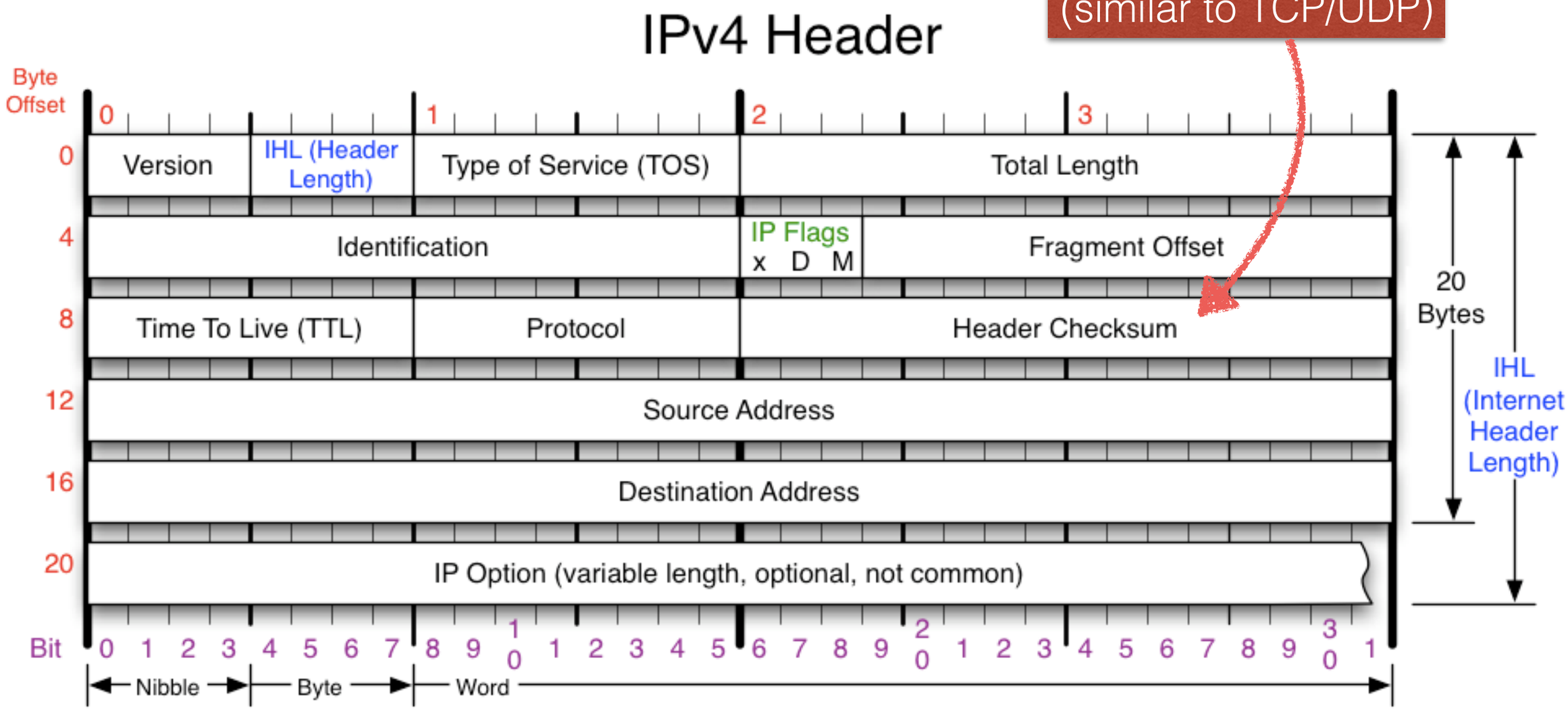

Licensed under the Creative Commons Attribution-NonCommercial-ShareAlike License: http://creativecommons.org/licenses/by-nc-sa/2.0/

The Internet Protocol

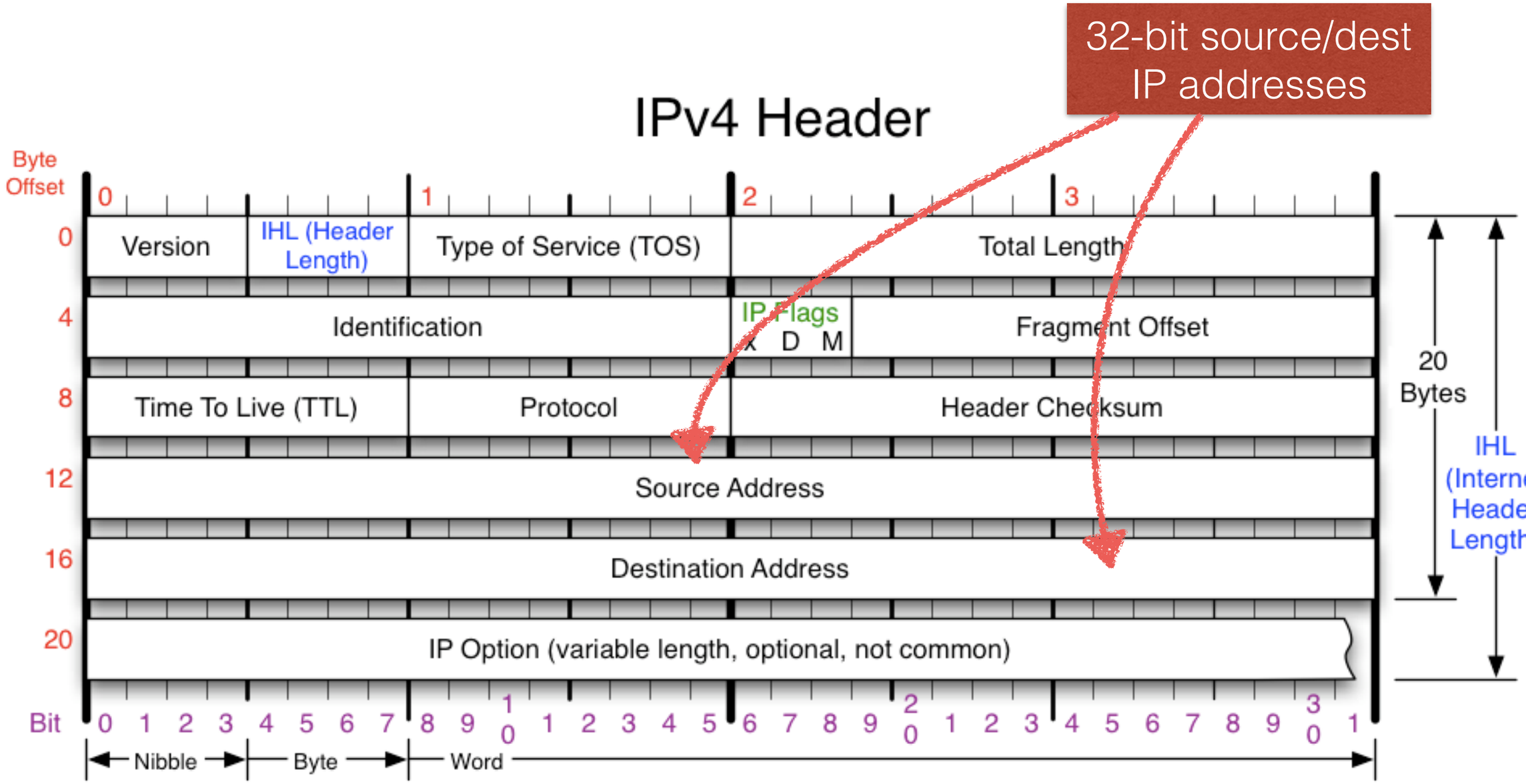

Licensed under the Creative Commons Attribution-NonCommercial-ShareAlike License: http://creativecommons.org/licenses/by-nc-sa/2.0/

The Internet Protocol

Other options we won't worry about for now

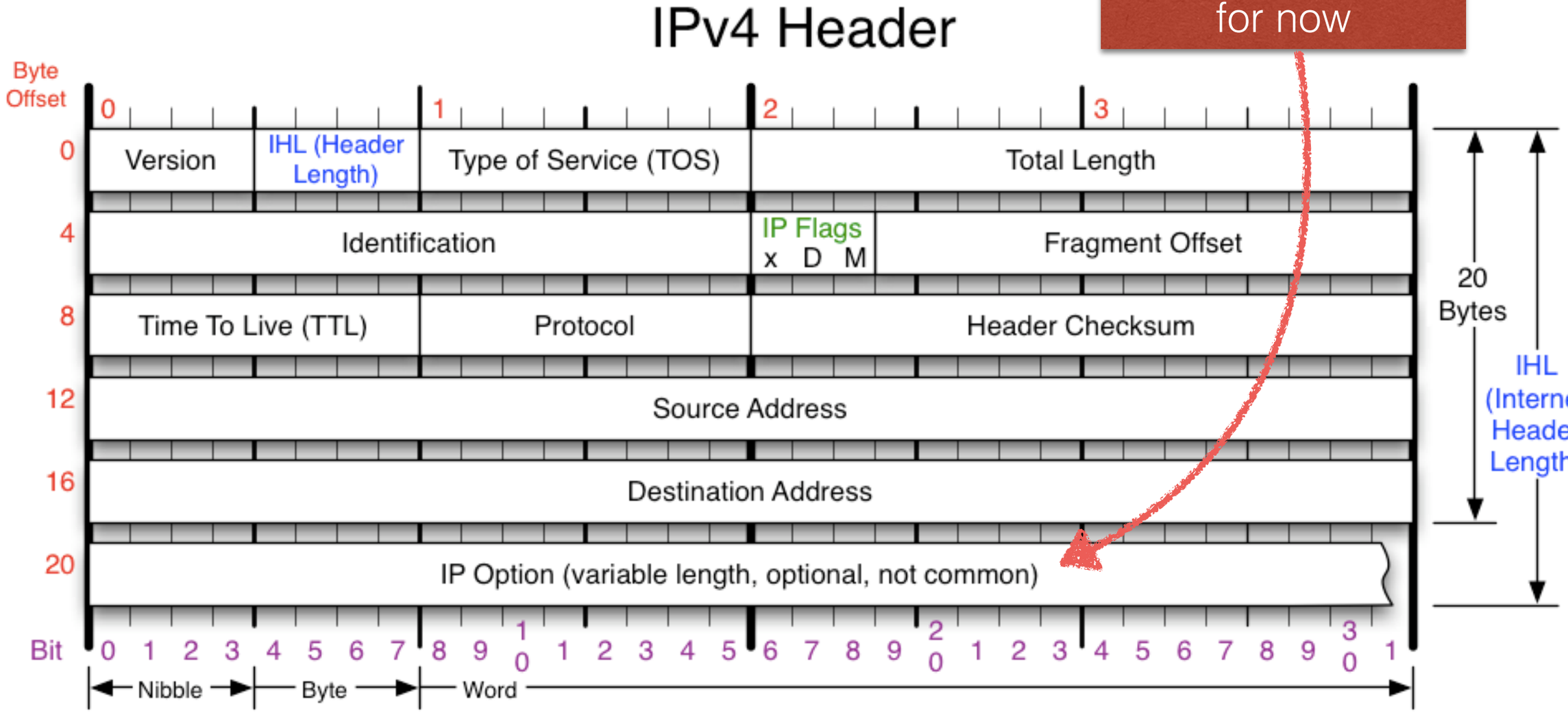

Licensed under the Creative Commons Attribution-NonCommercial-ShareAlike License: http://creativecommons.org/licenses/by-nc-sa/2.0/

The Internet Protocol

- Consequences of the IP header
  - Checksum must be recalculated **at each router**
    - At the least because TTL changes
    - Also possibly because of fragmentation
- 16-bit TTL means no more than 256 routers between any two hosts

Licensed under the Creative Commons Attribution-NonCommercial-ShareAlike License: http://creativecommons.org/licenses/by-nc-sa/2.0/

The Internet Protocol

- No more than 256 routers between any two hosts*
  - To avoid cycles (don't want to eat up bandwidth with immortal packets stuck in a loop)
  - Maximum hop count is between 30-35 in 95% of cases
  - * - unless an ISP is purposefully altering TTLs in transit (possible with newer hardware)

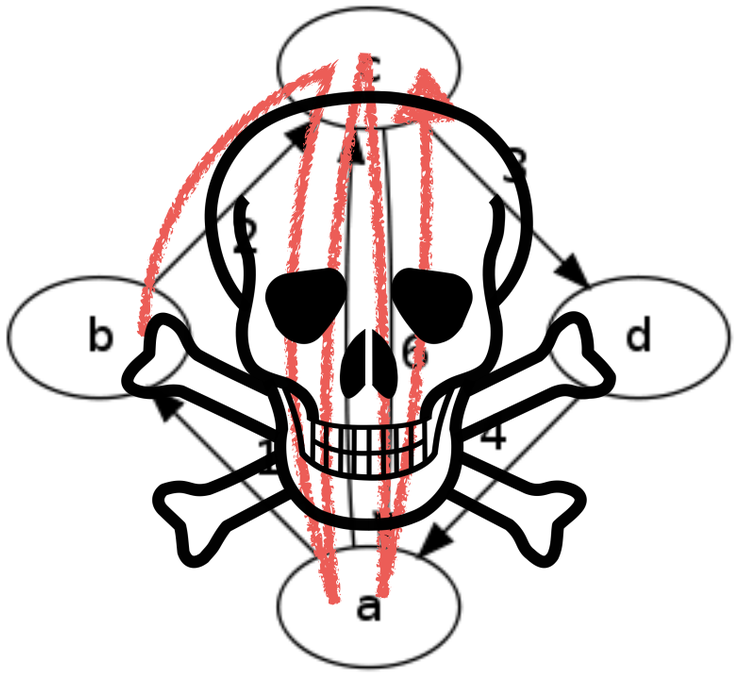

Licensed under the Creative Commons Attribution-NonCommercial-ShareAlike License: http://creativecommons.org/licenses/by-nc-sa/2.0/

Questions about the IP header?

Licensed under the Creative Commons Attribution-NonCommercial-ShareAlike License: http://creativecommons.org/licenses/by-nc-sa/2.0/

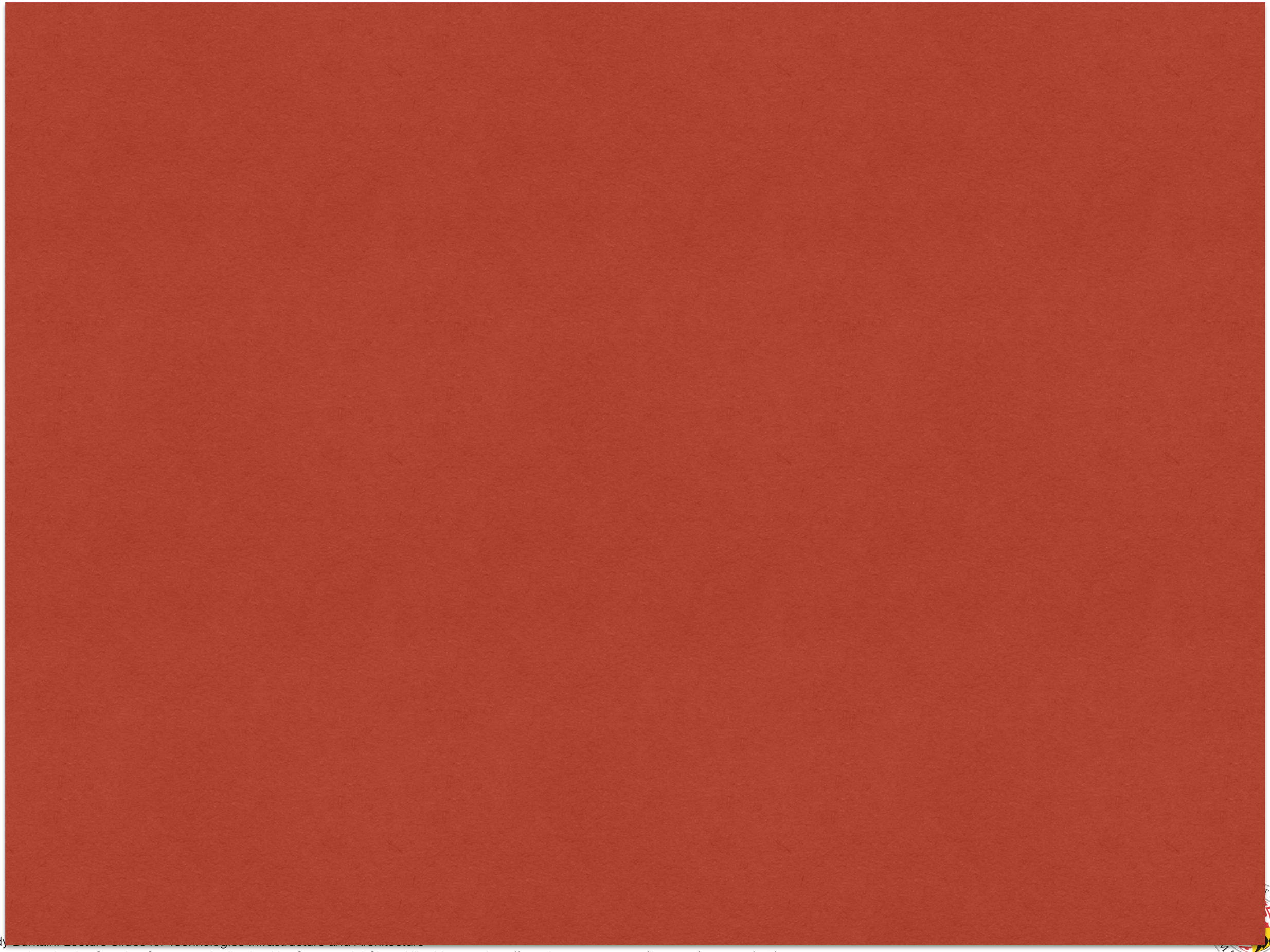

Licensed under the Creative Commons Attribution-NonCommercial-ShareAlike License: http://creativecommons.org/licenses/by-nc-sa/2.0/

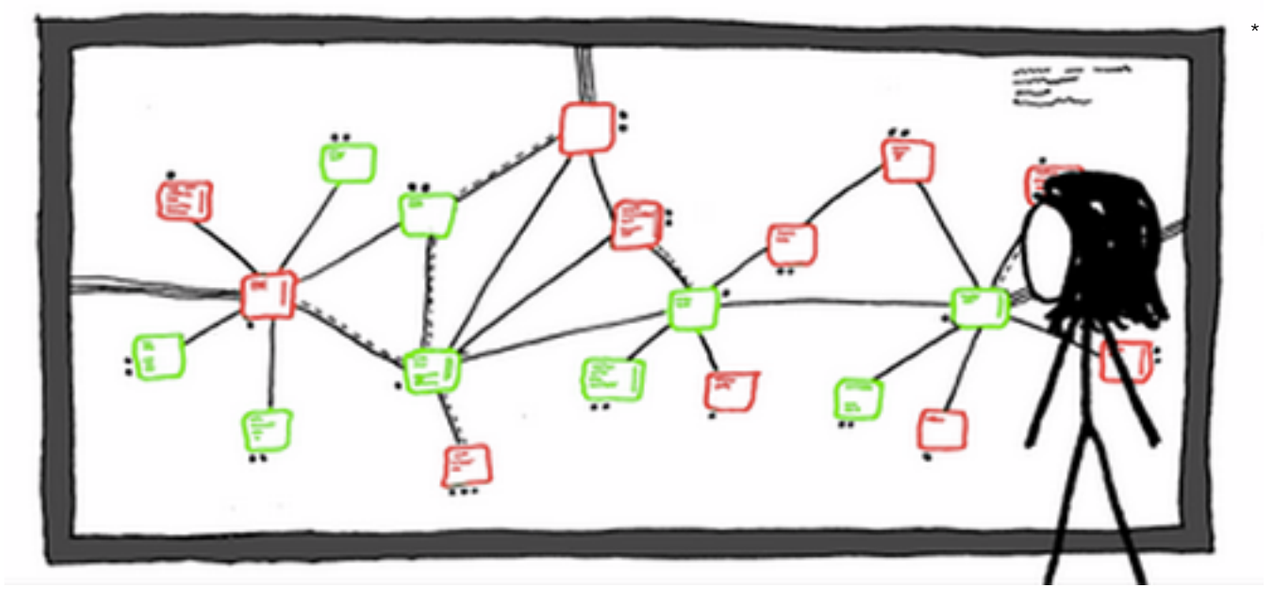

*

The Network Layer

INST346

Cody Buntain: Lecture Slides for *Technologies Infrastructure and Architecture*
Licensed under the Creative Commons Attribution-NonCommercial-ShareAlike License: http://creativecommons.org/licenses/by-nc-sa/2.0/

*Image from Randall Munroe's
https://xkcd.com/350/

Today's Agenda

- Lab 3 review
  - Was due before class today
  - Quiz 10 is up
    - Note updated reading assignment for Monday
- HW4 is due Friday **before class**
- IPv4 Fragmentation, Address Depletion, IPv6, and NAT

Licensed under the Creative Commons Attribution-NonCommercial-ShareAlike License: http://creativecommons.org/licenses/by-nc-sa/2.0/

Lab 3

Licensed under the Creative Commons Attribution-NonCommercial-ShareAlike License: http://creativecommons.org/licenses/by-nc-sa/2.0/

IPv4 Fragmentation

Licensed under the Creative Commons Attribution-NonCommercial-ShareAlike License: http://creativecommons.org/licenses/by-nc-sa/2.0/

IP Fragmentation

- TCP has a max segment size (MSS)
  - Application messages are partitioned into ≤MSS-sized segments
  - TCP reassembles segments at the receiver before sending up to application
- IP does a similar thing with **fragmentation**

Licensed under the Creative Commons Attribution-NonCommercial-ShareAlike License: http://creativecommons.org/licenses/by-nc-sa/2.0/

IP Fragmentation

- Why does fragmentation occur?
  - Can't know MTU of the whole path before hand
    - Path might change from packet to packet
  - A link between two routers in the path may have much smaller MTU than the link between sending host and router

Licensed under the Creative Commons Attribution-NonCommercial-ShareAlike License: http://creativecommons.org/licenses/by-nc-sa/2.0/

IP Fragmentation

MTU: 256
milligrams,
~400 characters,
~200 bytes in hex

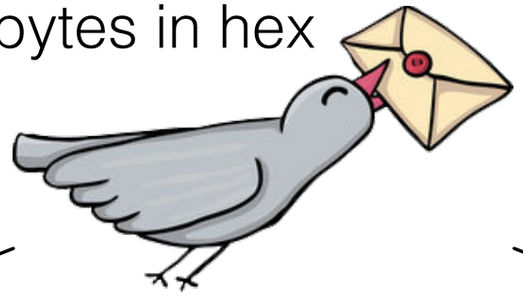

MTU: 1500
bytes

MTU: 1500
bytes

RFC1149: A Standard for the Transmission of IP Datagrams on Avian Carriers

Licensed under the Creative Commons Attribution-NonCommercial-ShareAlike License: http://creativecommons.org/licenses/by-nc-sa/2.0/

IP Fragmentation

MTU: 256
milligrams,
~400 characters,
~200 bytes in hex

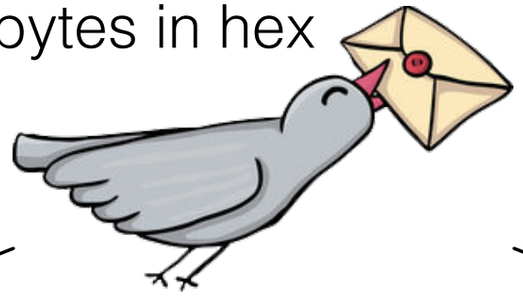

MTU: 1500
bytes

1500
bytes

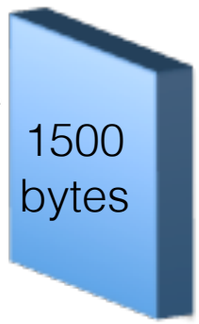

MTU: 1500
bytes

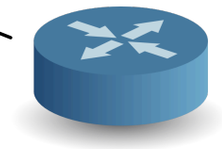

RFC1149: A Standard for the Transmission of IP Datagrams on Avian Carriers

Licensed under the Creative Commons Attribution-NonCommercial-ShareAlike License: http://creativecommons.org/licenses/by-nc-sa/2.0/

IP Fragmentation

MTU: 256
milligrams,
~400 characters,
~200 bytes in hex

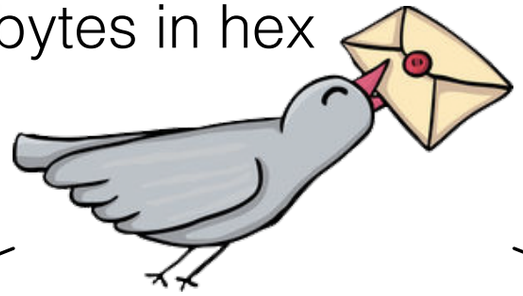

MTU: 1500
bytes

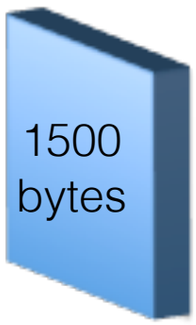

1500
bytes

Fragment big packet
into 8 smaller packets

MTU: 1500
bytes

RFC1149: A Standard for the Transmission of IP Datagrams on Avian Carriers

Licensed under the Creative Commons Attribution-NonCommercial-ShareAlike License: http://creativecommons.org/licenses/by-nc-sa/2.0/

IP Fragmentation

MTU: 256
milligrams,
~400 characters,
~200 bytes in hex

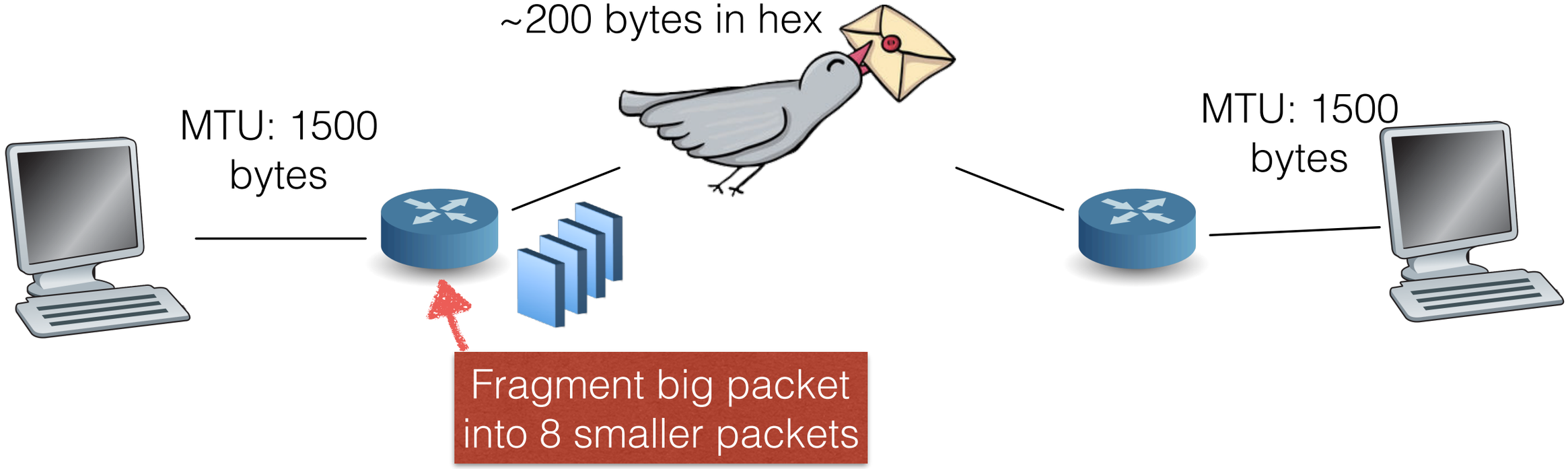

RFC1149: A Standard for the Transmission of IP Datagrams on Avian Carriers

Licensed under the Creative Commons Attribution-NonCommercial-ShareAlike License: http://creativecommons.org/licenses/by-nc-sa/2.0/

IP Fragmentation

MTU: 256
milligrams,
~400 characters,
~200 bytes in hex

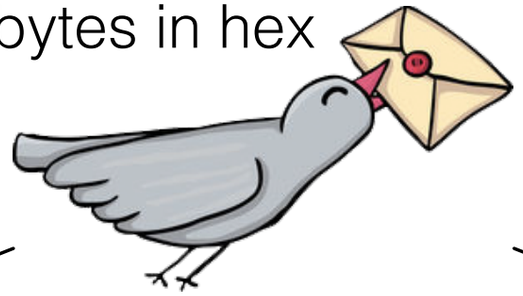

MTU: 1500
bytes

MTU: 1500
bytes

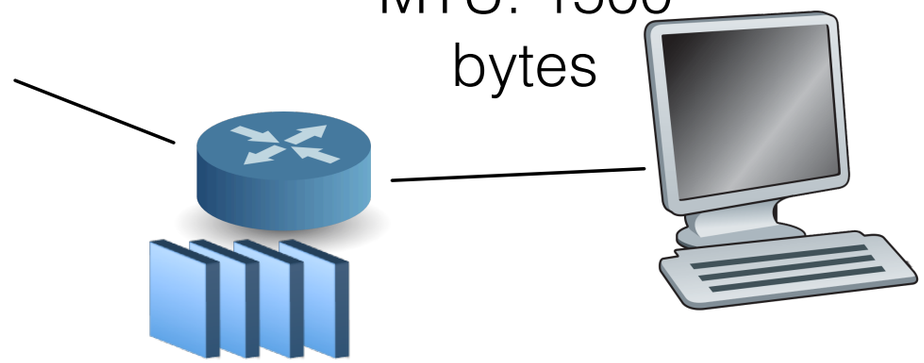

RFC1149: A Standard for the Transmission of IP Datagrams on Avian Carriers

Licensed under the Creative Commons Attribution-NonCommercial-ShareAlike License: http://creativecommons.org/licenses/by-nc-sa/2.0/

IP Fragmentation

MTU: 256
milligrams,
~400 characters,
~200 bytes in hex

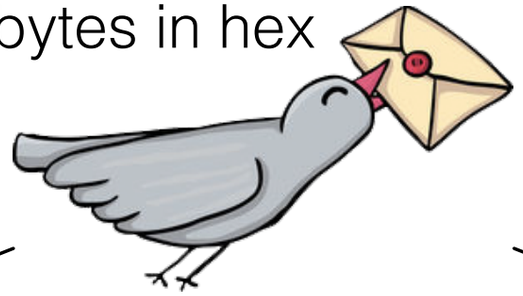

MTU: 1500
bytes

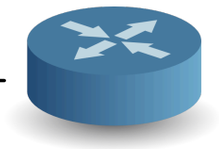

MTU: 1500
bytes

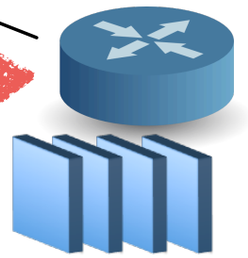

Receive 8
smaller packets

RFC1149: A Standard for the Transmission of IP Datagrams on Avian Carriers

Licensed under the Creative Commons Attribution-NonCommercial-ShareAlike License: http://creativecommons.org/licenses/by-nc-sa/2.0/

IP Fragmentation

MTU: 256
milligrams,
~400 characters,
~200 bytes in hex

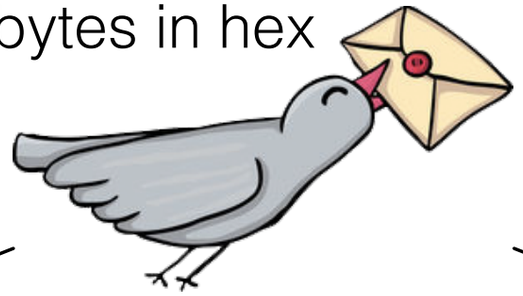

MTU: 1500
bytes

MTU: 1500
bytes

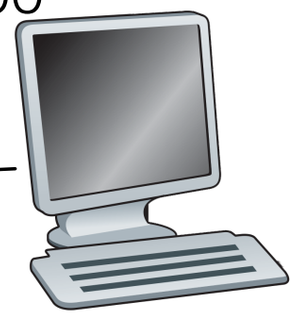

RFC1149: A Standard for the Transmission of IP Datagrams on Avian Carriers

Licensed under the Creative Commons Attribution-NonCommercial-ShareAlike License: http://creativecommons.org/licenses/by-nc-sa/2.0/

IP Fragmentation

MTU: 256
milligrams,
~400 characters,
~200 bytes in hex

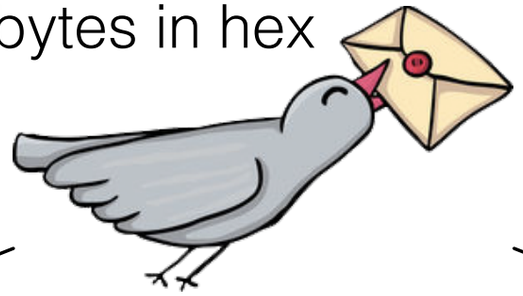

MTU: 1500
bytes

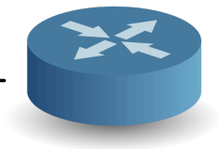

MTU: 1500
bytes

Receive 8
small packets
and reassemble
before sending to
transport layer

RFC1149: A Standard for the Transmission of IP Datagrams on Avian Carriers

Licensed under the Creative Commons Attribution-NonCommercial-ShareAlike License: http://creativecommons.org/licenses/by-nc-sa/2.0/

IP Fragmentation

- NOTE: Reassembly happens **only** at destination
  - Why?
  - Router performance
    - Could impact processing delay

Licensed under the Creative Commons Attribution-NonCommercial-ShareAlike License: http://creativecommons.org/licenses/by-nc-sa/2.0/

IP Fragmentation

- How does IP fragment and reassemble?
  - TCP used sequence numbers to reorder
  - IP has similar construct with ID and fragment offset header fields
    - Datagram ID is unique (ish since 16-bit field) for each datagram sent from host
    - All fragments of original packet have same ID

Licensed under the Creative Commons Attribution-NonCommercial-ShareAlike License: http://creativecommons.org/licenses/by-nc-sa/2.0/

IP Fragmentation

- How does IP fragment and reassemble (cont.)
  - A fragment's **offset** field describes its offset from start in 8-byte chunks
  - The M(ore) flag says to expect more fragments (M=1) or that this is the last fragment (M=0)

Licensed under the Creative Commons Attribution-NonCommercial-ShareAlike License: http://creativecommons.org/licenses/by-nc-sa/2.0/

IP Fragmentation

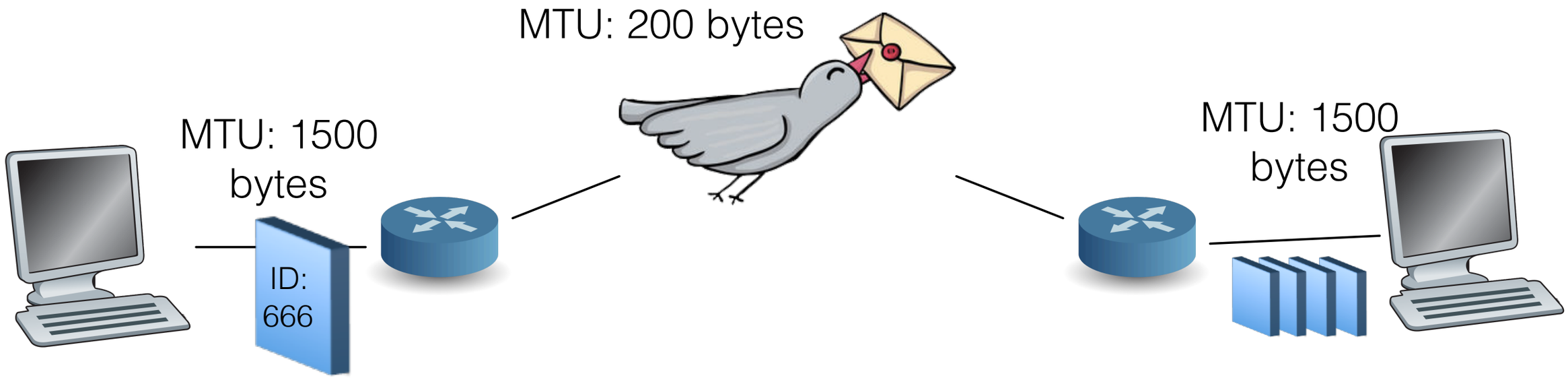

Fragment	Bytes	ID	Offset	M Flag
1	0-199	666	0	1
2	200-399	666	25	1
3	400-599	666	50	1
4	600-799	666	75	1
I	|	|	|	|
8	1400-1499	666	175	0

Licensed under the Creative Commons Attribution-NonCommercial-ShareAlike License: http://creativecommons.org/licenses/by-nc-sa/2.0/

IP Fragmentation

- What happens if a fragment is lost?
  - Entire IP datagram is discarded (all datagrams with same ID)
    - Upper layers may retransmit
- Disable fragmentation with D(o not frag) flag = 1
  - If packet can't fit in a link's MTU, it is dropped
- Lower limit to fragmentation: IPv4 won't fragment a packet below 576 bytes

Licensed under the Creative Commons Attribution-NonCommercial-ShareAlike License: http://creativecommons.org/licenses/by-nc-sa/2.0/

Questions about the IP fragmentation?

Licensed under the Creative Commons Attribution-NonCommercial-ShareAlike License: http://creativecommons.org/licenses/by-nc-sa/2.0/

IP Address Depletion

- Reminder: IPv4 has a 32-bit address space
- Can uniquely address ~4.3 billion devices

Licensed under the Creative Commons Attribution-NonCommercial-ShareAlike License: http://creativecommons.org/licenses/by-nc-sa/2.0/

IP Address Depletion

- Five regional Internet registries (RIRs):
  - AFRINIC - Africa, portions of the Indian Ocean
  - APNIC - Portions of Asia, portions of Oceania
  - ARIN - Canada, many Caribbean and North Atlantic islands, and the United States
  - LACNIC - Latin America, portions of the Caribbean
  - RIPE NCC - Europe, the Middle East, Central Asia

Licensed under the Creative Commons Attribution-NonCommercial-ShareAlike License: http://creativecommons.org/licenses/by-nc-sa/2.0/

IP Address Depletion

- In February of 2011, the IANA issued the **last** five class A blocks of IP addresses to ARIN
  - As of April 2014, ARIN had only one class A block left of unallocated IP addresses
  - "On 24 September 2015, ARIN issued the final IPv4 addresses in its free pool"
  - All other IPv4 allocations are on a waitlist and will be met through transfers, returns, or revocations

Licensed under the Creative Commons Attribution-NonCommercial-ShareAlike License: http://creativecommons.org/licenses/by-nc-sa/2.0/

IP Address Depletion

- Solutions:
  - IPv6
  - Network Address Translation (NAT)
    - More about this later

Licensed under the Creative Commons Attribution-NonCommercial-ShareAlike License: http://creativecommons.org/licenses/by-nc-sa/2.0/

IPv6

- First, what happened to IPv5?
- Called the “Internet Stream Protocol”
- Connection-oriented network protocol
- Never publicly released

Licensed under the Creative Commons Attribution-NonCommercial-ShareAlike License: http://creativecommons.org/licenses/by-nc-sa/2.0/

IPv6

- IPv6 is more similar to IPv4
- IPv6 expands IP address space to 128 bits
  - 3*10^38 possible addresses
  - More than the estimate of stars in the universe (according to the ESA)
- Streamlined the IP headers

Licensed under the Creative Commons Attribution-NonCommercial-ShareAlike License: http://creativecommons.org/licenses/by-nc-sa/2.0/

IPv6

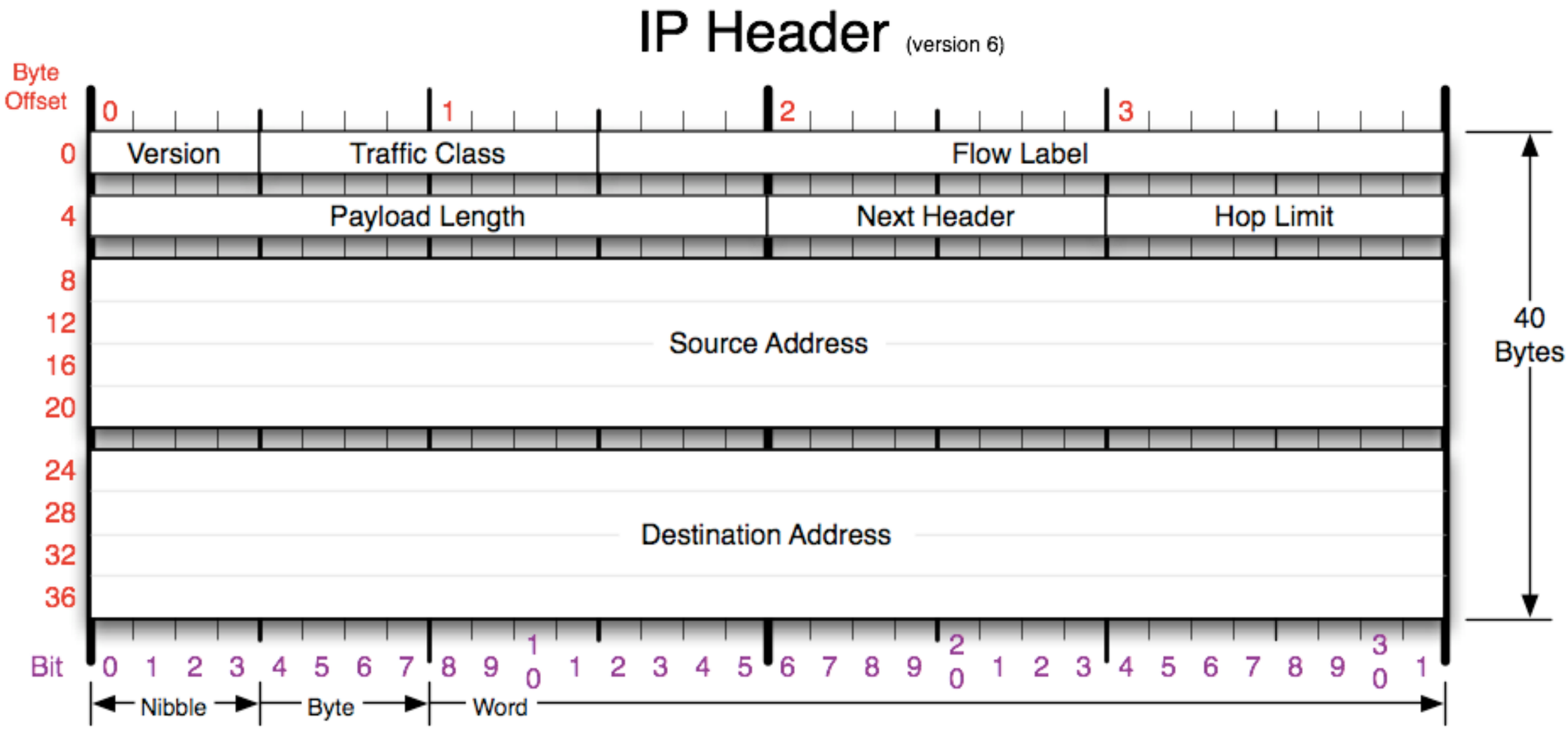

Licensed under the Creative Commons Attribution-NonCommercial-ShareAlike License: http://creativecommons.org/licenses/by-nc-sa/2.0/

IPv6

Like the Type-of-Service field in IPv4

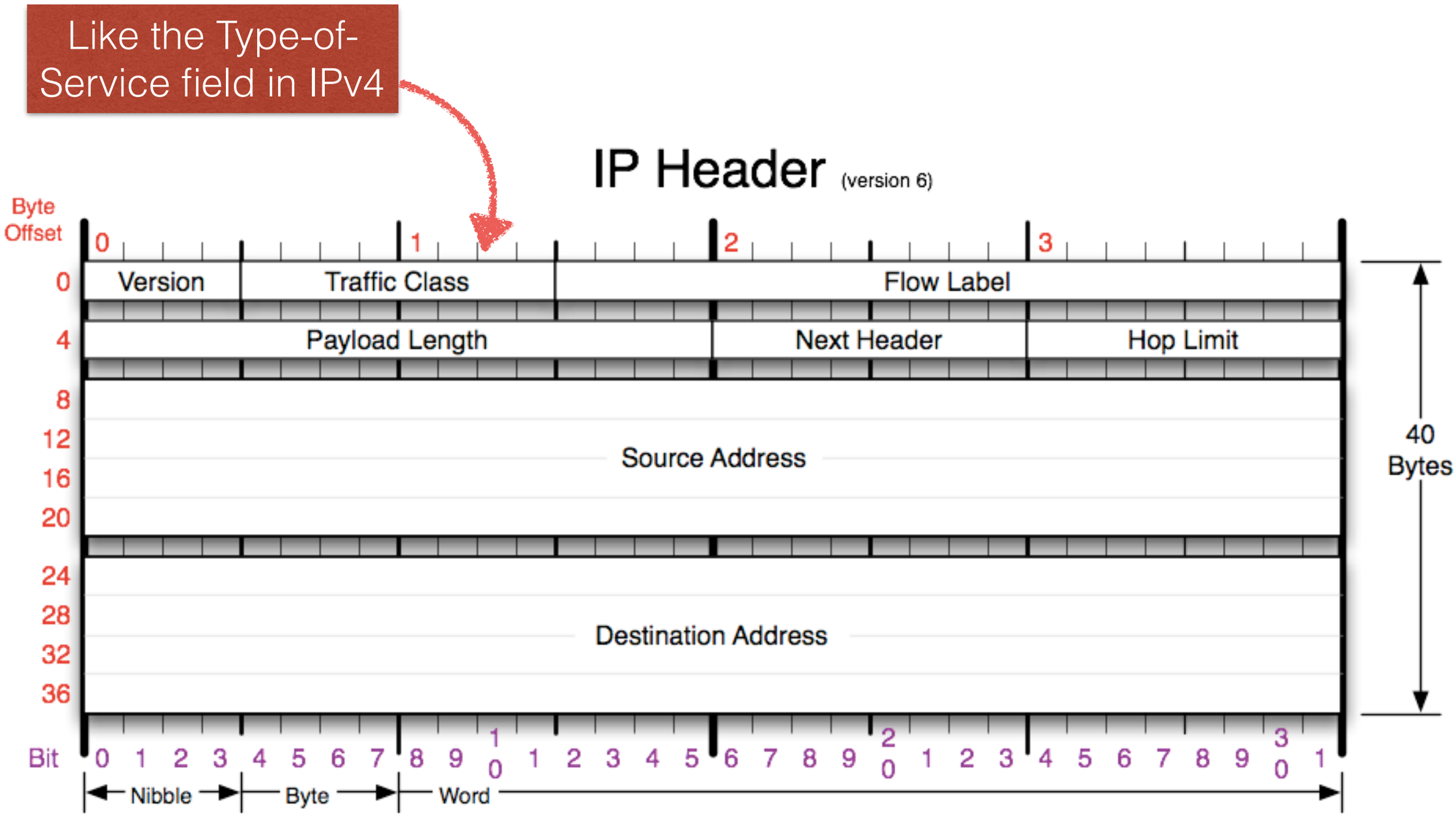

Licensed under the Creative Commons Attribution-NonCommercial-ShareAlike License: http://creativecommons.org/licenses/by-nc-sa/2.0/

IPv6

Be able to differentiate between different types of content

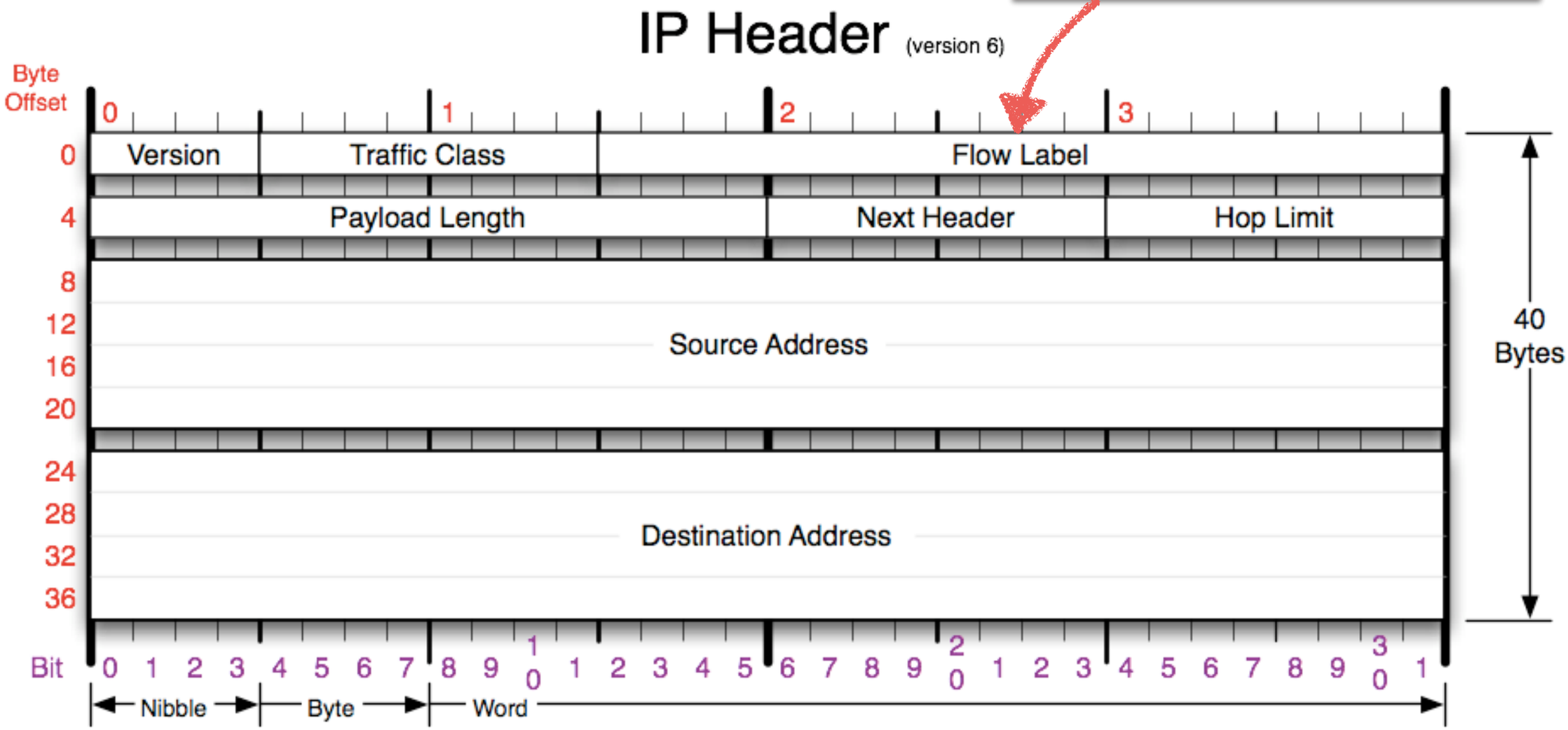

Licensed under the Creative Commons Attribution-NonCommercial-ShareAlike License: http://creativecommons.org/licenses/by-nc-sa/2.0/

IPv6

- The **Flow Type** field is vaguely defined
  - Suppose to identify different types of content streams
  - Could be used for prioritizing specific types of content
    - Streaming audio/video vs. text

Licensed under the Creative Commons Attribution-NonCommercial-ShareAlike License: http://creativecommons.org/licenses/by-nc-sa/2.0/

IPv6

Length of payload (note it does not include the header, which is now a fixed size)

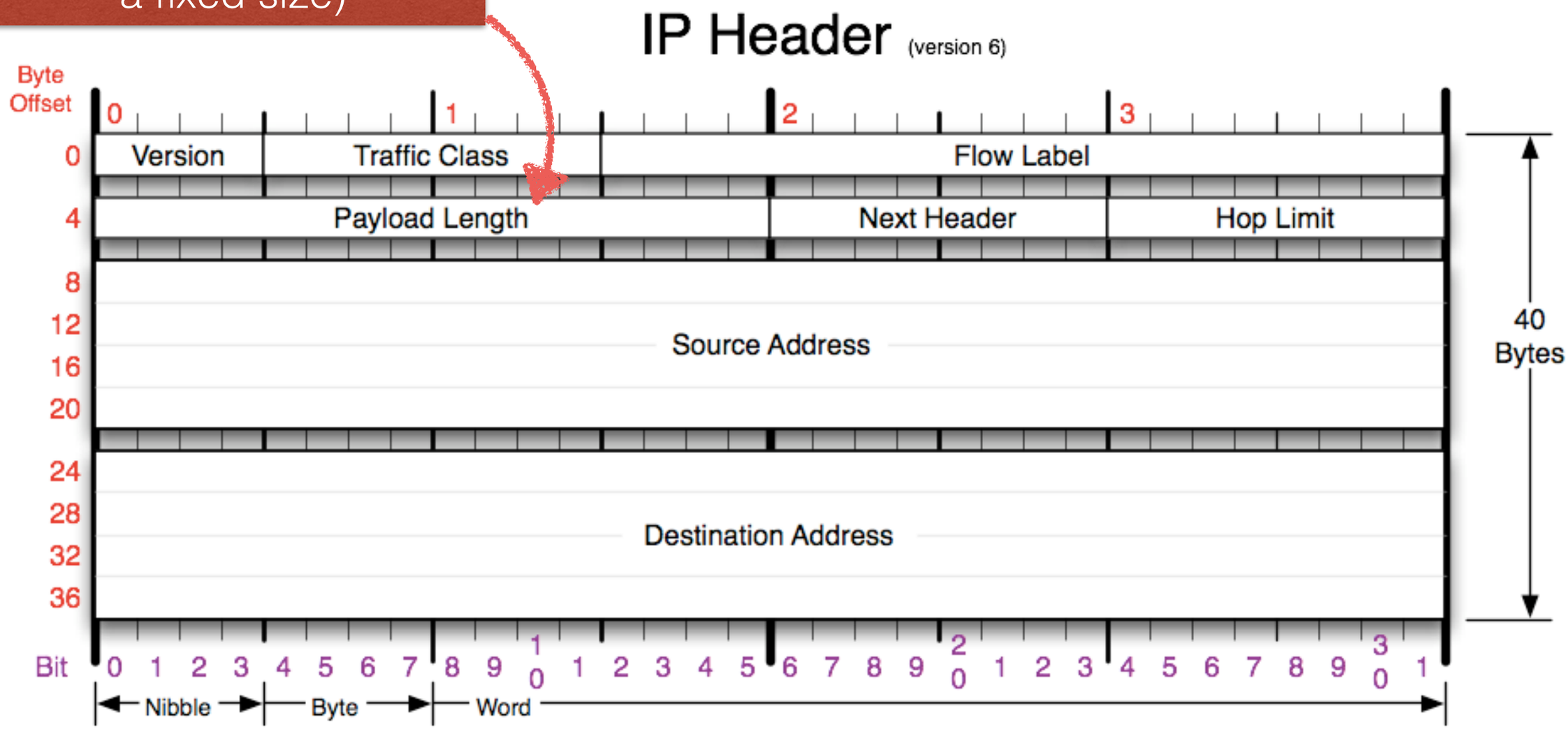

Licensed under the Creative Commons Attribution-NonCommercial-ShareAlike License: http://creativecommons.org/licenses/by-nc-sa/2.0/

IPv6

Pointer to the next header (rather than IP options)

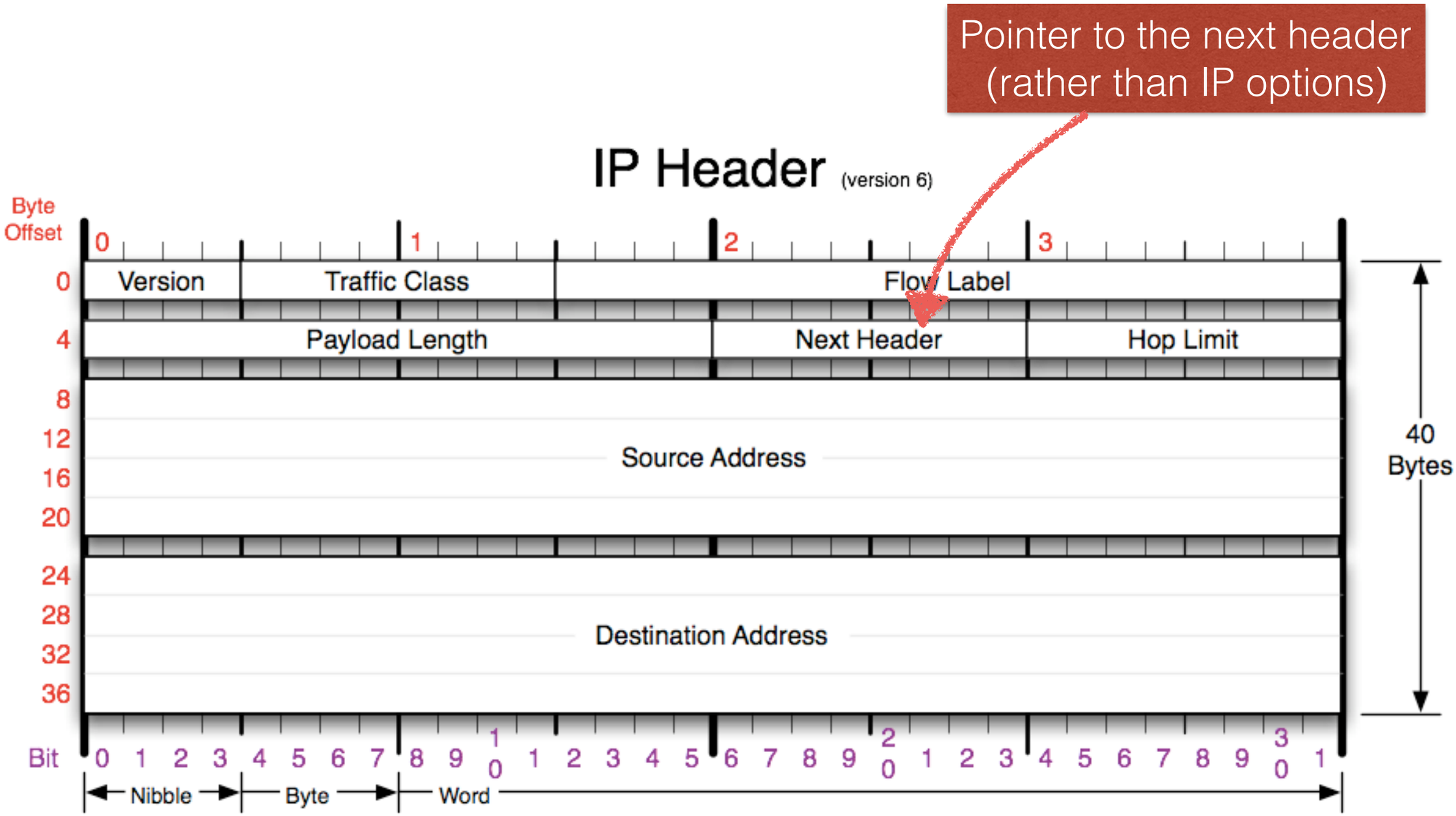

Cody Buntain: Lecture Slides for *Technologies Infrastructure and Architecture*
Licensed under the Creative Commons Attribution-NonCommercial-ShareAlike License: http://creativecommons.org/licenses/by-nc-sa/2.0/

IPv6

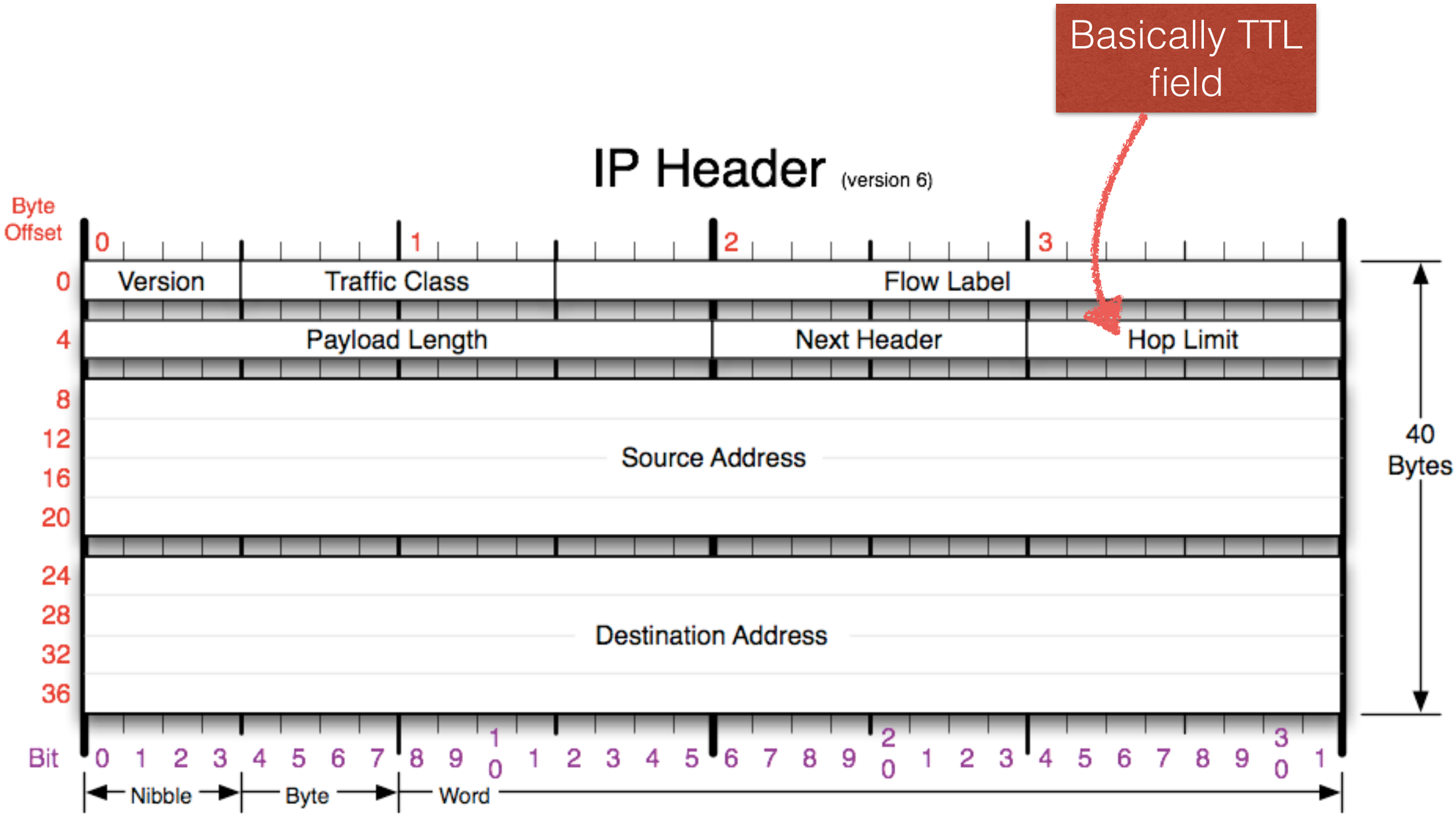

Cody Buntain: Lecture Slides for *Technologies Infrastructure and Architecture*
Licensed under the Creative Commons Attribution-NonCommercial-ShareAlike License: http://creativecommons.org/licenses/by-nc-sa/2.0/

IPv6

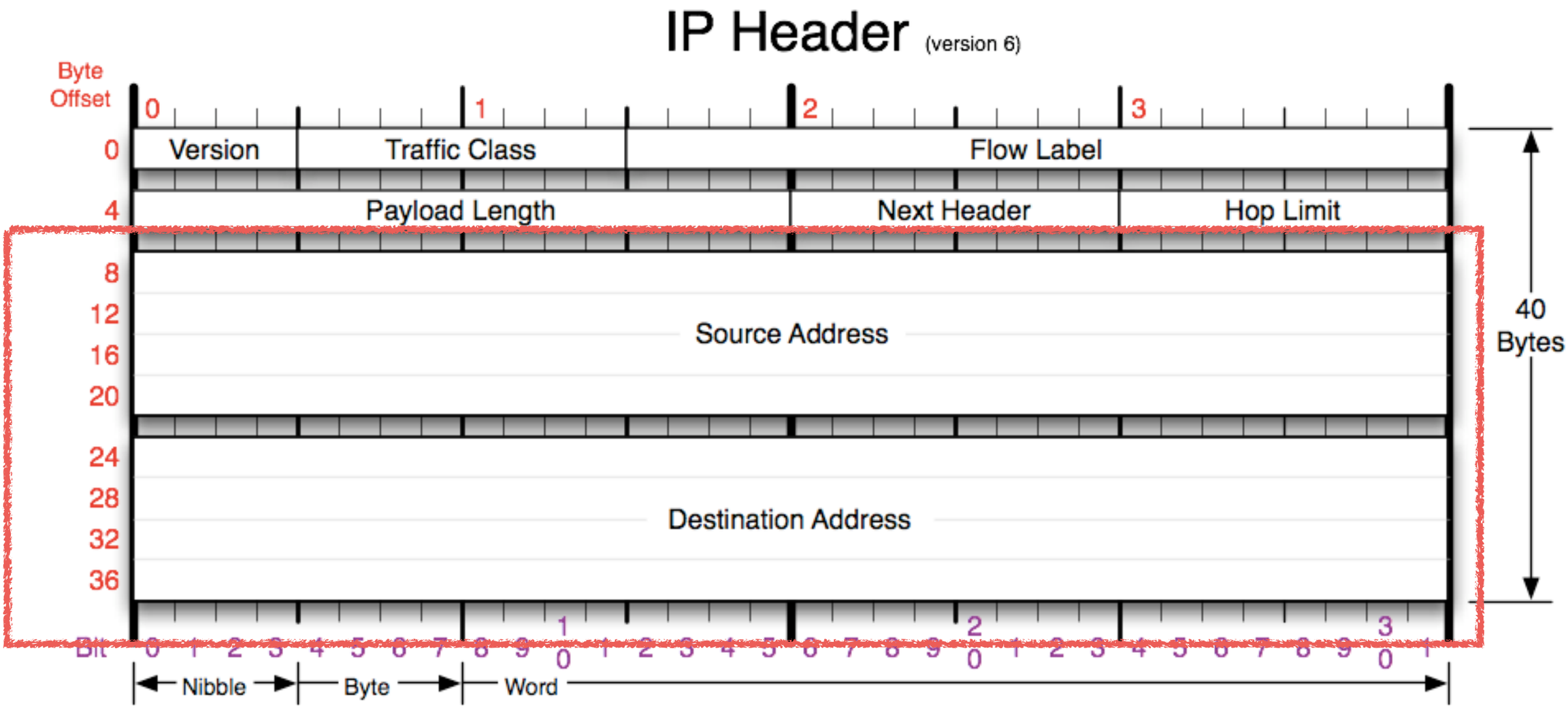

Cody Buntain: Lecture Slides for *Technologies Infrastructure and Architecture*
Licensed under the Creative Commons Attribution-NonCommercial-ShareAlike License: http://creativecommons.org/licenses/by-nc-sa/2.0/

IPv6

- Note the **absence of a checksum** field
  - Routers in IPv6 do not calculate checksums
    - To enhance performance

Licensed under the Creative Commons Attribution-NonCommercial-ShareAlike License: http://creativecommons.org/licenses/by-nc-sa/2.0/

IPv6

- Also absent are **fragmentation fields**
  - IPv6 does not support in-router fragmentation
  - IPv6 expects hosts to probe the network to determine a path's MTU
    - Similar to RTT sampling
    - Routers respond with an ICMP **Packet too Big** message if the packet can't find through the link

Licensed under the Creative Commons Attribution-NonCommercial-ShareAlike License: http://creativecommons.org/licenses/by-nc-sa/2.0/

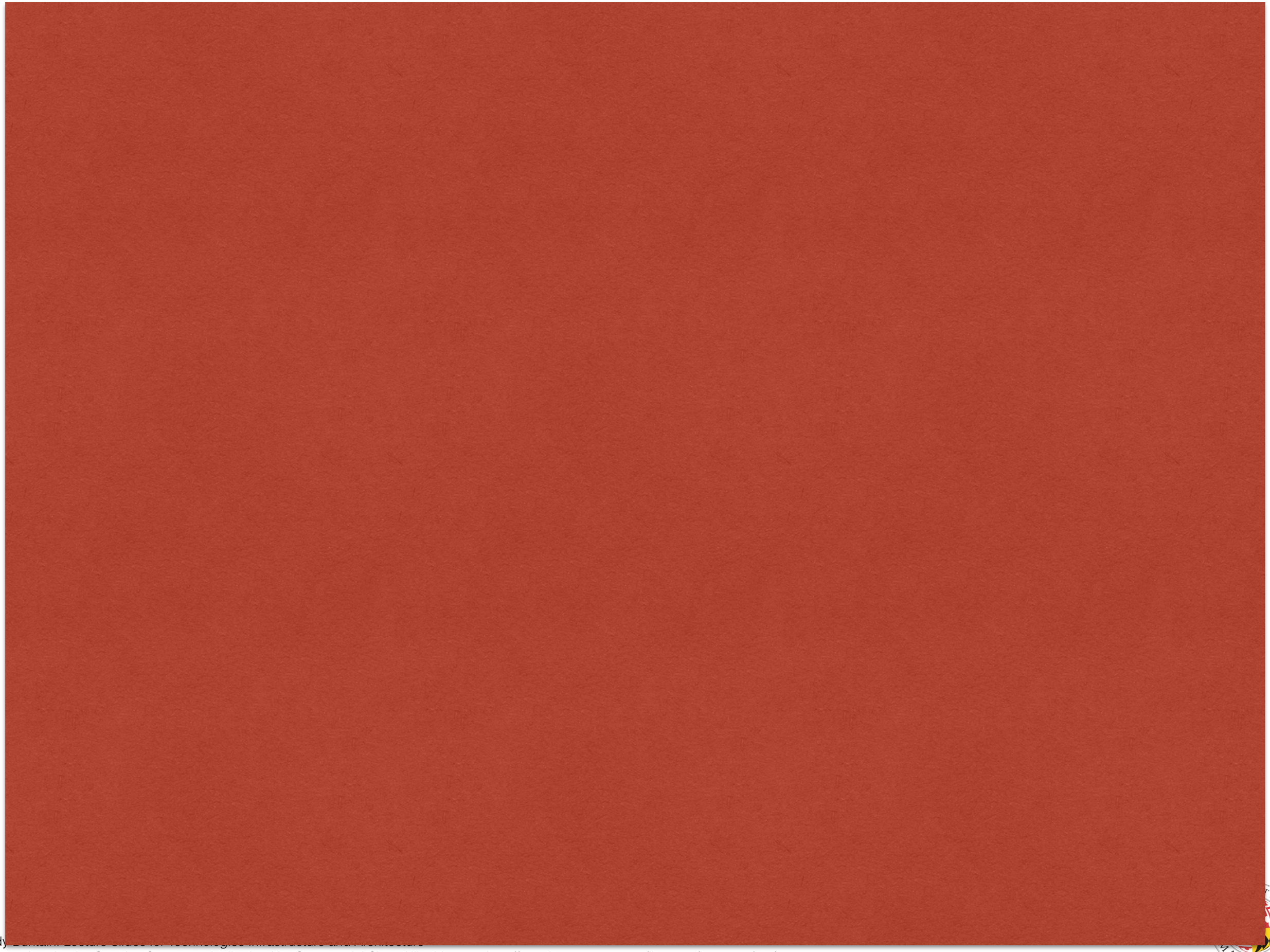

Licensed under the Creative Commons Attribution-NonCommercial-ShareAlike License: http://creativecommons.org/licenses/by-nc-sa/2.0/

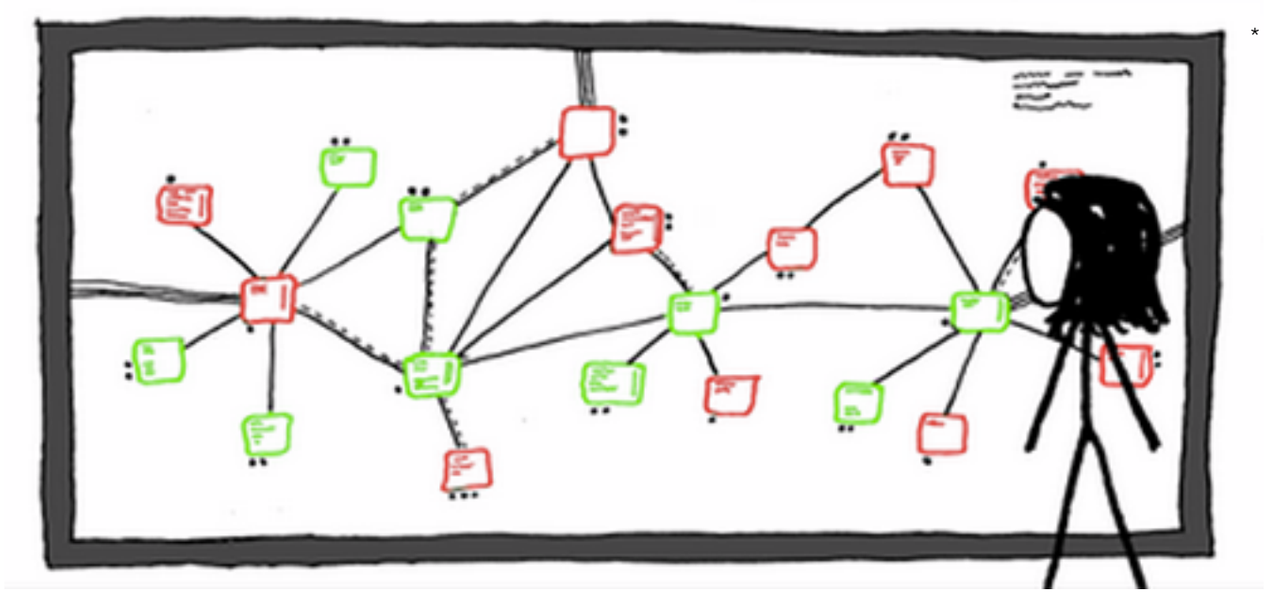

*

The Network Layer

INST346

Licensed under the Creative Commons Attribution-NonCommercial-ShareAlike License: http://creativecommons.org/licenses/by-nc-sa/2.0/

*Image from Randall Munroe's https://xkcd.com/350/

Today's Agenda

- Finish up IPv6 and NAT
- A Day in the Life

Licensed under the Creative Commons Attribution-NonCommercial-ShareAlike License: http://creativecommons.org/licenses/by-nc-sa/2.0/

IPv6 Continued

- Why IPv6?
  - To solve IPv4 address depletion
  - To improve performance in routers

Licensed under the Creative Commons Attribution-NonCommercial-ShareAlike License: http://creativecommons.org/licenses/by-nc-sa/2.0/

IPv6

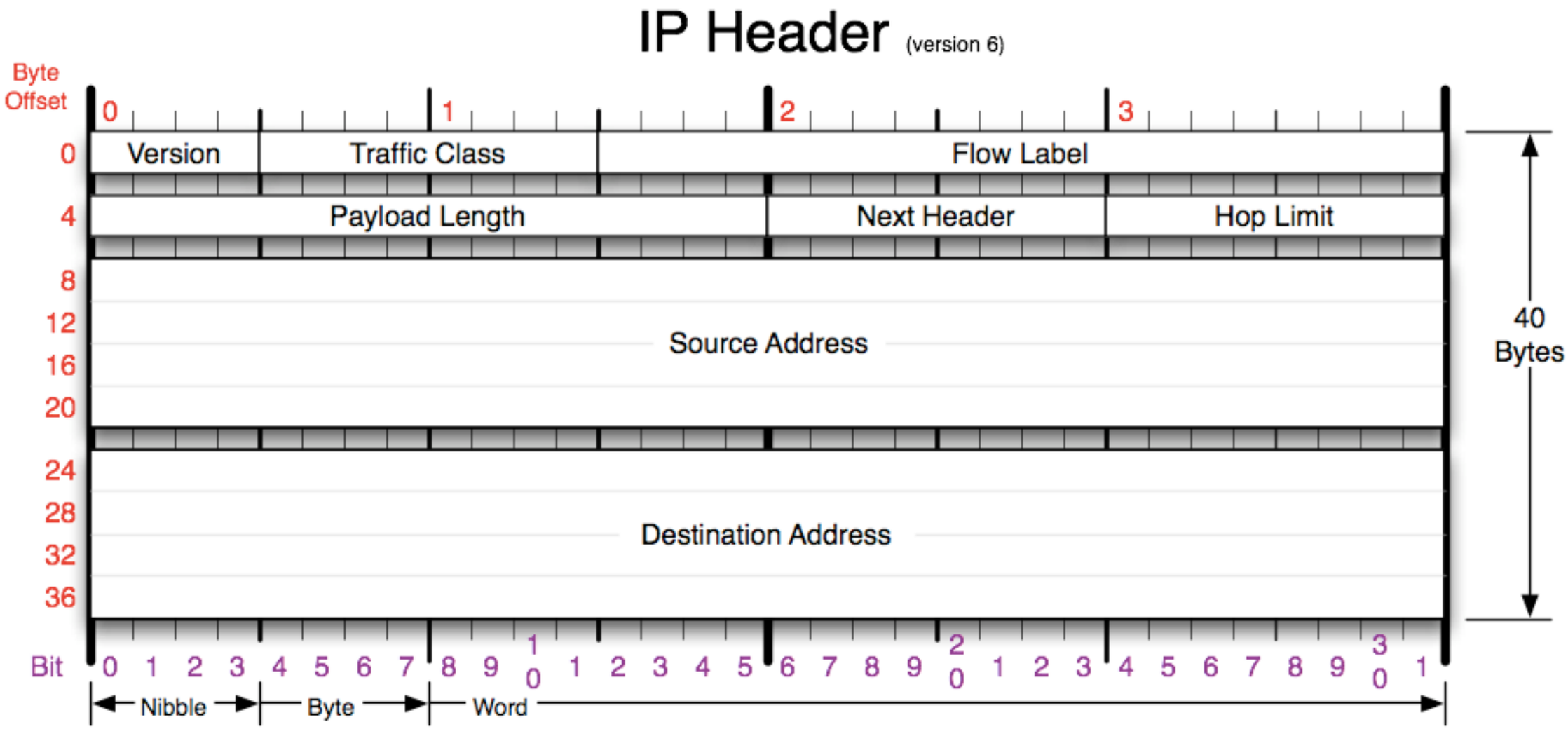

Licensed under the Creative Commons Attribution-NonCommercial-ShareAlike License: http://creativecommons.org/licenses/by-nc-sa/2.0/

IPv6

- The **Flow Type** field is vaguely defined
  - Similar to IPv4's traffic type field
  - Suppose to identify different types of content streams
  - Could be used for prioritizing specific types of content
    - Streaming audio/video vs. text
    - Net neutrality implications?

Licensed under the Creative Commons Attribution-NonCommercial-ShareAlike License: http://creativecommons.org/licenses/by-nc-sa/2.0/

IPv6

- IPv6 addresses
  - Formatted using **string notation**
    - xxxx:xxxx:xxxx:xxxx:xxxx:xxxx:xxxx:xxxx
    - 8 sets of 16-bit hexadecimal strings
    - **One set** of consecutive zeros are shown as **::**
    - E.g., 0:0:0:0:0:0:0:5 = ::5

Licensed under the Creative Commons Attribution-NonCommercial-ShareAlike License: http://creativecommons.org/licenses/by-nc-sa/2.0/

IPv6

- IPv6 addresses
  - Also introduced **anycast** addresses
    - Support for multiple nodes to share the same IPv6 address
    - Routing to a group of anycast addresses goes to the **closest** node
    - Could be used for load balancing

Licensed under the Creative Commons Attribution-NonCommercial-ShareAlike License: http://creativecommons.org/licenses/by-nc-sa/2.0/

IPv6

- Transitioning from IPv4 to IPv6
  - Phased transition (i.e., no single day for switching over)
  - Dual IPv4/IPv6 stack
  - IPv6 tunneling over IPv4
    - Package the entire IPv6 packet into the data section of an IPv4 packet

Licensed under the Creative Commons Attribution-NonCommercial-ShareAlike License: http://creativecommons.org/licenses/by-nc-sa/2.0/

Questions about IPv6?

Licensed under the Creative Commons Attribution-NonCommercial-ShareAlike License: http://creativecommons.org/licenses/by-nc-sa/2.0/

IPv4 Depletion

- Two solutions:
  - IPv6 <— Engineered solution
  - NAT <— stop-gap solution

Licensed under the Creative Commons Attribution-NonCommercial-ShareAlike License: http://creativecommons.org/licenses/by-nc-sa/2.0/

Routers and IPv4 Depletion

- How can we address this issue without building out a new infrastructure?
- Saw IPv6 adoption is SLOW and expensive
- A different way?

Licensed under the Creative Commons Attribution-NonCommercial-ShareAlike License: http://creativecommons.org/licenses/by-nc-sa/2.0/

Routers and IPv4 Depletion

- Now we know a bit about how routers work
- Routers can also be used to alleviate IPv4 address depletion
  - Through **N**etwork **A**ddress **T**ranslation (NAT)
    - Masquerade many devices behind a single IP address
    - Also called **IP Masquerading**

Licensed under the Creative Commons Attribution-NonCommercial-ShareAlike License: http://creativecommons.org/licenses/by-nc-sa/2.0/

Network Address Translation

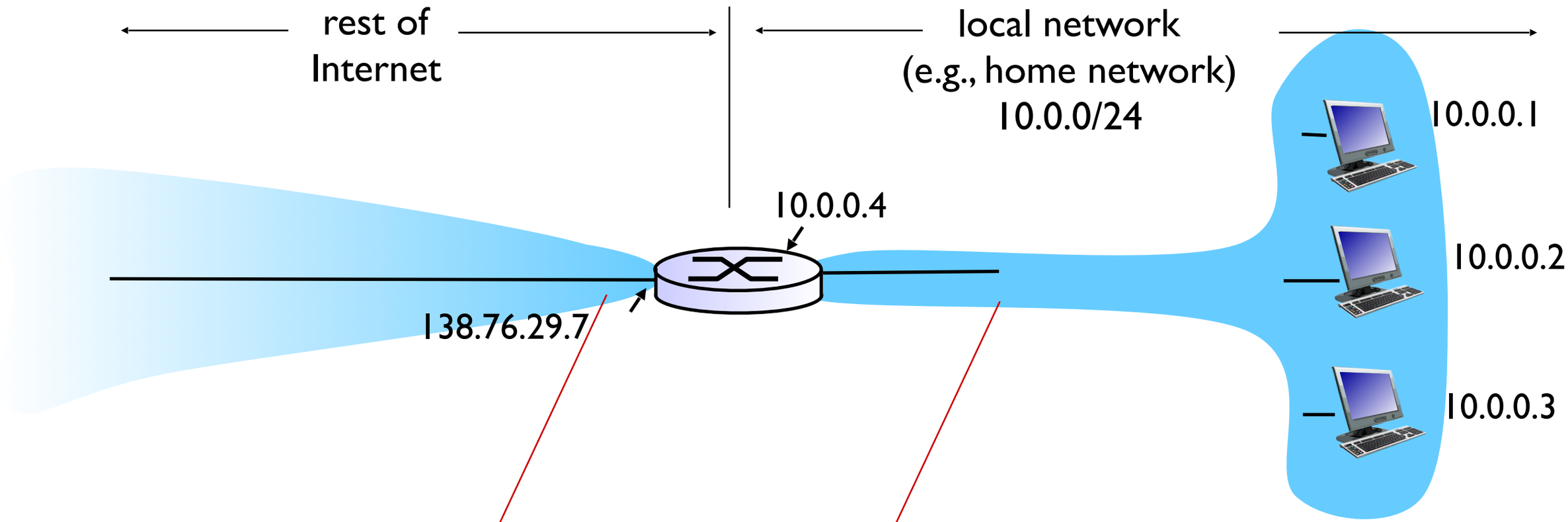

all datagrams *leaving* local network have *same* single source NAT IP address: 138.76.29.7,different source port numbers

datagrams with source or destination in this network have 10.0.0/24 address for source, destination (as usual)

Licensed under the Creative Commons Attribution-NonCommercial-ShareAlike License: http://creativecommons.org/licenses/by-nc-sa/2.0/

Network Address Translation

motivation: local network uses just one IP address as far as outside world is concerned:

- range of addresses not needed from ISP: just one IP address for all devices
- can change addresses of devices in local network without notifying outside world
- can change ISP without changing addresses of devices in local network
- devices inside local net not explicitly addressable, visible by outside world (a security plus)

Licensed under the Creative Commons Attribution-NonCommercial-ShareAlike License: http://creativecommons.org/licenses/by-nc-sa/2.0/

NAT: network address translation

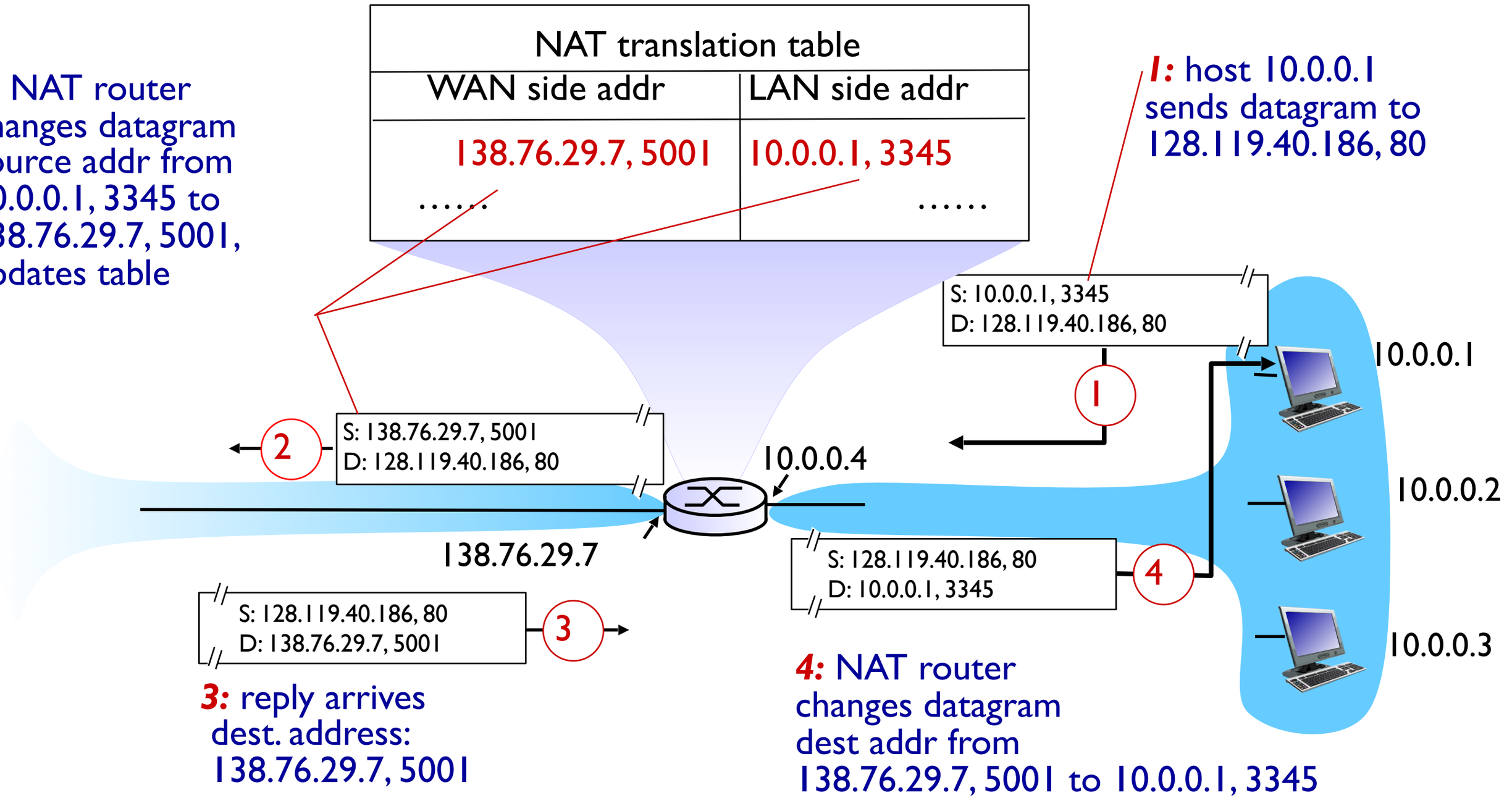

Licensed under the Creative Commons Attribution-NonCommercial-ShareAlike License: http://creativecommons.org/licenses/by-nc-sa/2.0/

NAT: network address translation

implementation: NAT router must:

- *outgoing datagrams: replace* (source IP address, port #) of every outgoing datagram to (NAT IP address, new port #)
  . . . remote clients/servers will respond using (NAT IP address, new port #) as destination addr

- *remember (in NAT translation table)* every (source IP address, port #) to (NAT IP address, new port #) translation pair

- *incoming datagrams: replace* (NAT IP address, new port #) in dest fields of every incoming datagram with corresponding (source IP address, port #) stored in NAT table

Licensed under the Creative Commons Attribution-NonCommercial-ShareAlike License: http://creativecommons.org/licenses/by-nc-sa/2.0/

NAT: network address translation

- 16-bit port-number field:
  - 65k simultaneous connections with a single LAN-side address!
- NAT is controversial:
  - routers should only process up to layer 3
  - violates end-to-end argument
    - NAT possibility must be taken into account by app designers, e.g., P2P applications
  - address shortage should instead be solved by IPv6

Licensed under the Creative Commons Attribution-NonCommercial-ShareAlike License: http://creativecommons.org/licenses/by-nc-sa/2.0/

NAT traversal problem

- client wants to connect to server with address 10.0.0.1
  - server address 10.0.0.1 local to LAN (client can't use it as destination addr)
  - only one externally visible NATed address: 138.76.29.7
- *solution 1:* statically configure NAT to forward incoming connection requests at given port to server
  - e.g., (123.76.29.7, port 2500) always forwarded to 10.0.0.1 port 25000

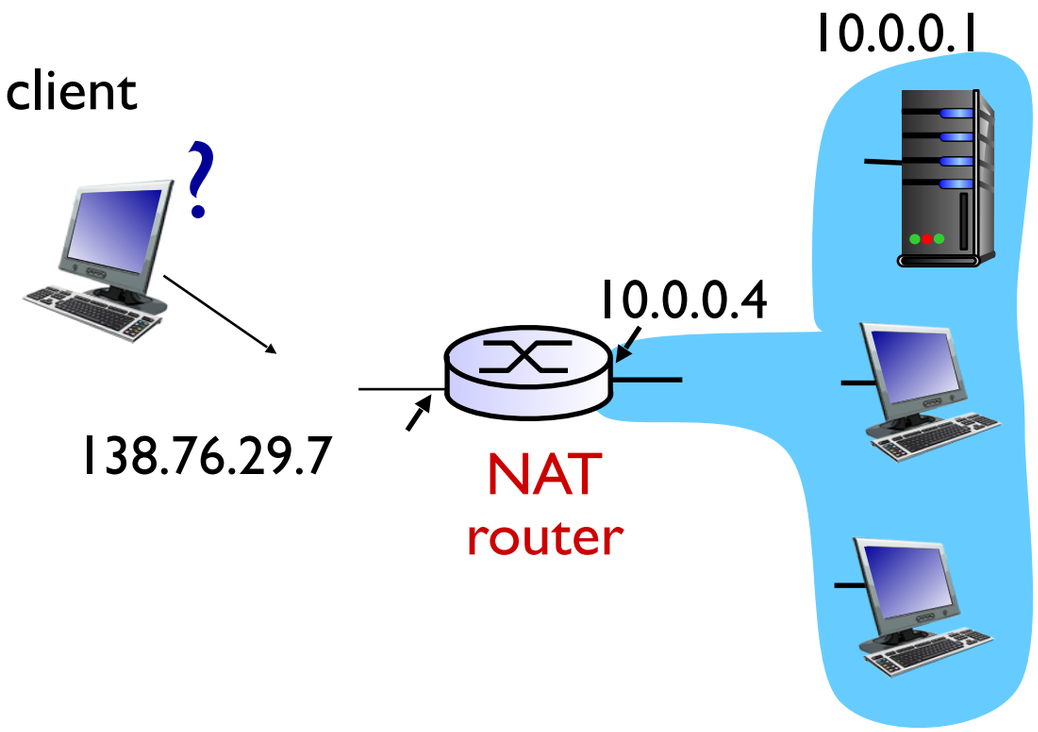

Licensed under the Creative Commons Attribution-NonCommercial-ShareAlike License: http://creativecommons.org/licenses/by-nc-sa/2.0/

NAT traversal problem

- *solution 2:* Universal Plug and Play (UPnP) Internet Gateway Device (IGD) Protocol. Allows NATed host to:
  - learn public IP address (138.76.29.7)
  - add/remove port mappings (with lease times)

i.e., automate static NAT port map configuration

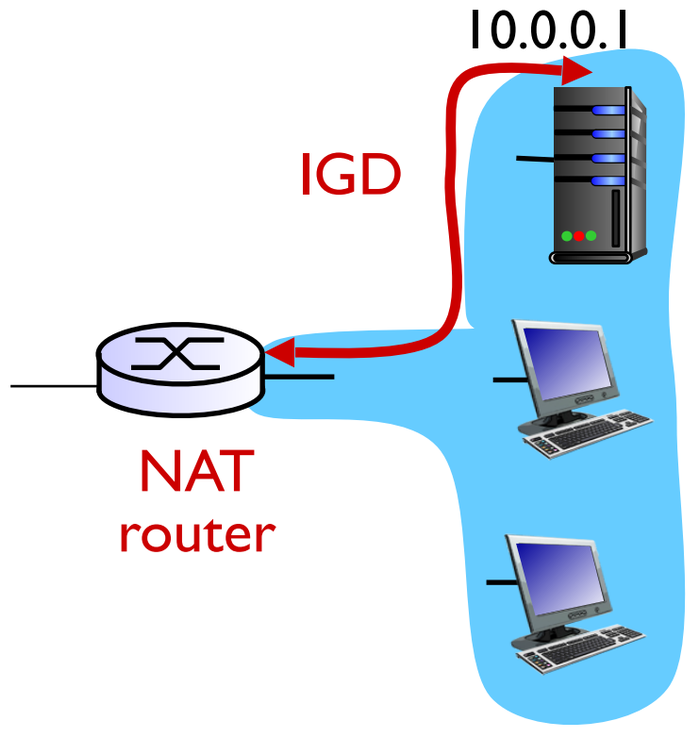

Licensed under the Creative Commons Attribution-NonCommercial-ShareAlike License: http://creativecommons.org/licenses/by-nc-sa/2.0/

NAT traversal problem

- *solution 3:* relaying (used in Skype)
  - NATed client establishes connection to relay
  - external client connects to relay
  - relay bridges packets between to connections

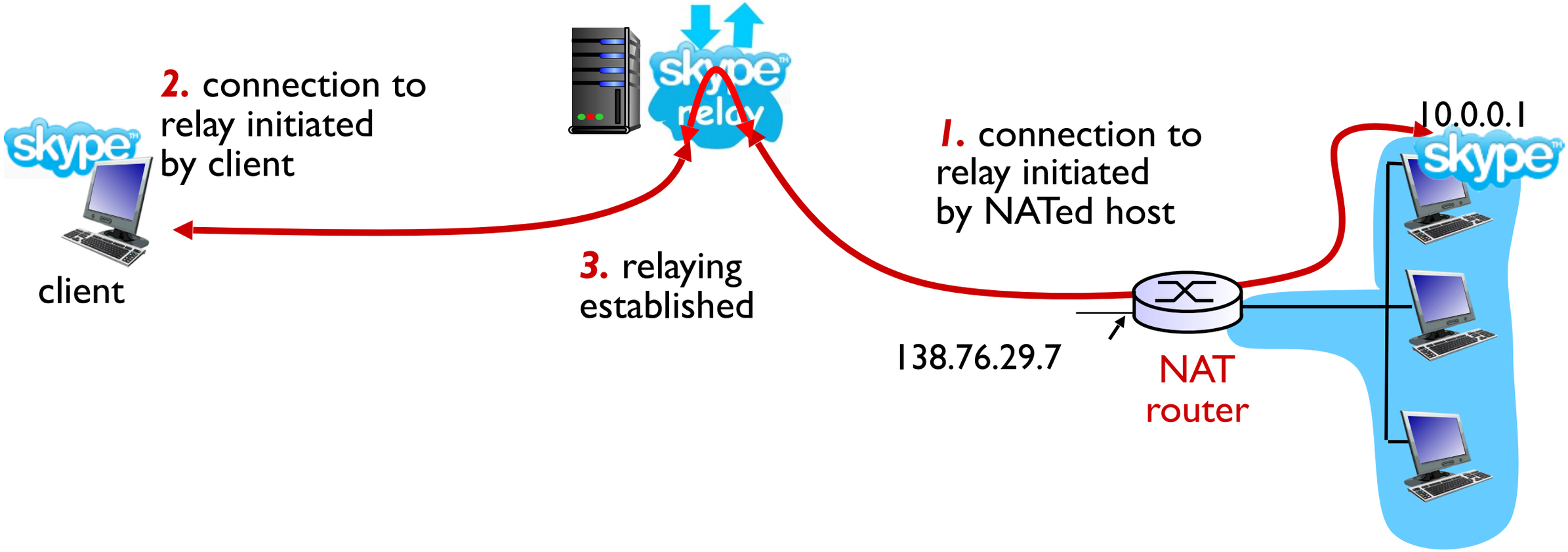

Cody Buntain: Lecture Slides for *Technologies Infrastructure and Architecture*
Licensed under the Creative Commons Attribution-NonCommercial-ShareAlike License: http://creativecommons.org/licenses/by-nc-sa/2.0/

NAT: network address translation

- Most home routers use NAT to share your ISP's connection among your in-house devices

Licensed under the Creative Commons Attribution-NonCommercial-ShareAlike License: http://creativecommons.org/licenses/by-nc-sa/2.0/

Questions about NAT?

Licensed under the Creative Commons Attribution-NonCommercial-ShareAlike License: http://creativecommons.org/licenses/by-nc-sa/2.0/

Broadcasting in the Internet

- Final topic in the Network Layer is broadcasting
- Already saw you can send a packet to all hosts on the **Local Area Network** (LAN), or same subnet, by addressing 255.255.255.255
  - Broadcast packets are generally not forwarded across routers (see SMURF attack)
- Can also send to a **subset** of the larger Internet using **multicasting**

Licensed under the Creative Commons Attribution-NonCommercial-ShareAlike License: http://creativecommons.org/licenses/by-nc-sa/2.0/

Broadcasting in the Internet

- Multitasking is a service provided by routers and the network layer
- Can send a single packet to many different recipients
- Why is this useful?
  - Distributed file sharing
  - Broadcasting a lecture to many viewers

Licensed under the Creative Commons Attribution-NonCommercial-ShareAlike License: http://creativecommons.org/licenses/by-nc-sa/2.0/

Broadcasting in the Internet

- Hosts actively join **multicast groups**
- A host informs its adjacent router of its membership
- Primarily used in large organizations with one way-streaming
  - Stock exchanges
  - Hotels
  - Universities

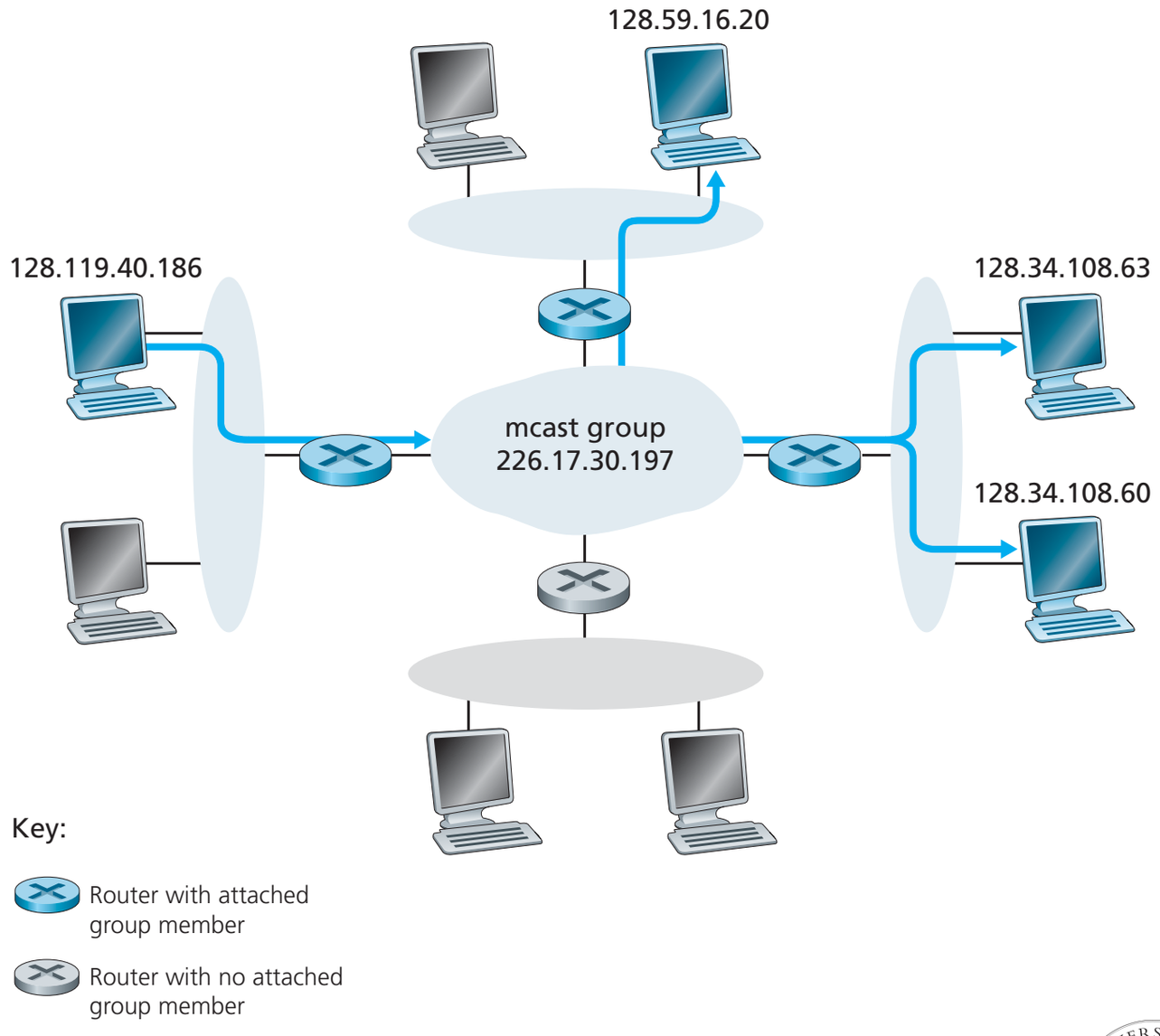

Cody Buntain: Lecture Slides for *Technologies Infrastructure and Architecture*
Licensed under the Creative Commons Attribution-NonCommercial-ShareAlike License: http://creativecommons.org/licenses/by-nc-sa/2.0/

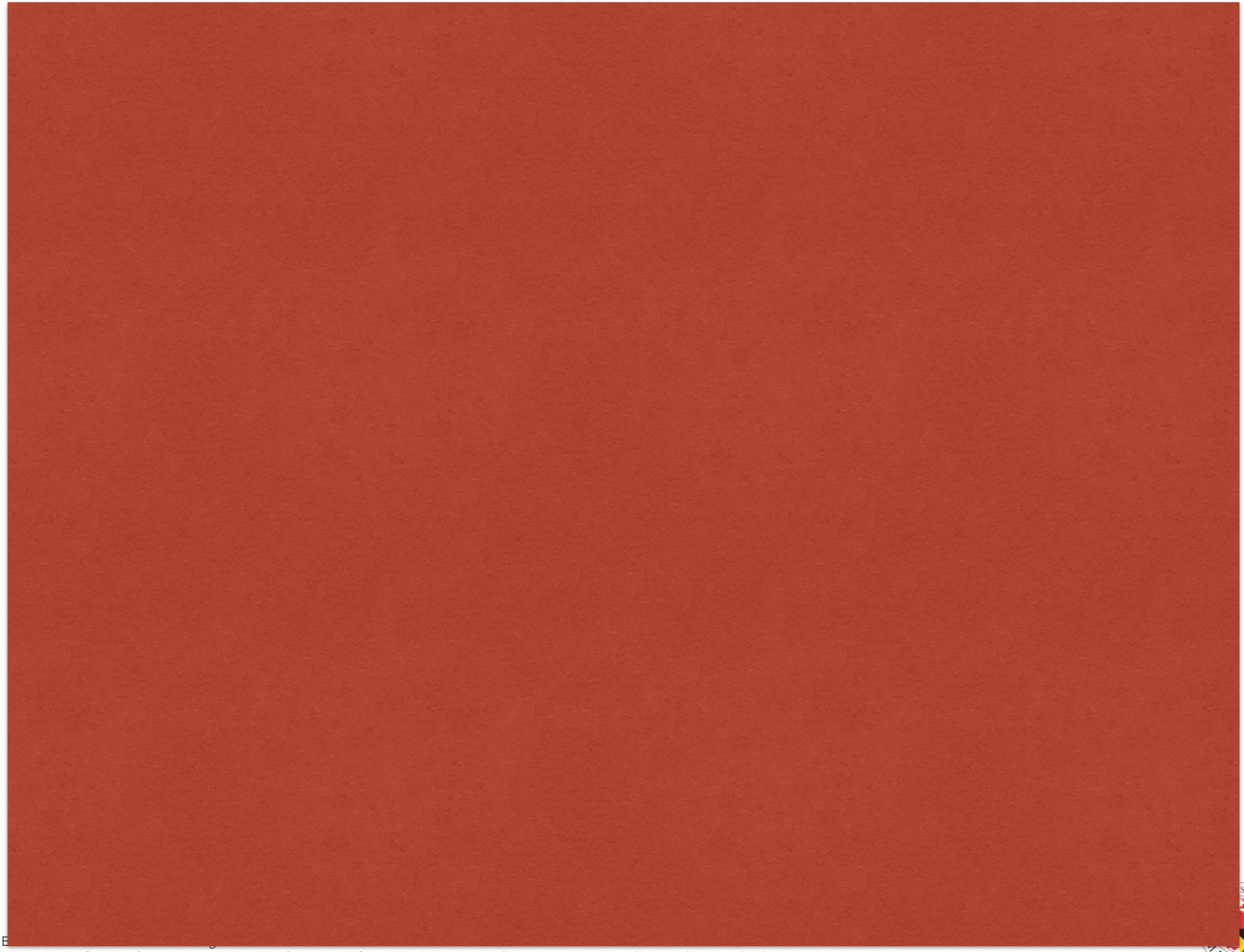

Licensed under the Creative Commons Attribution-NonCommercial-ShareAlike License: http://creativecommons.org/licenses/by-nc-sa/2.0/

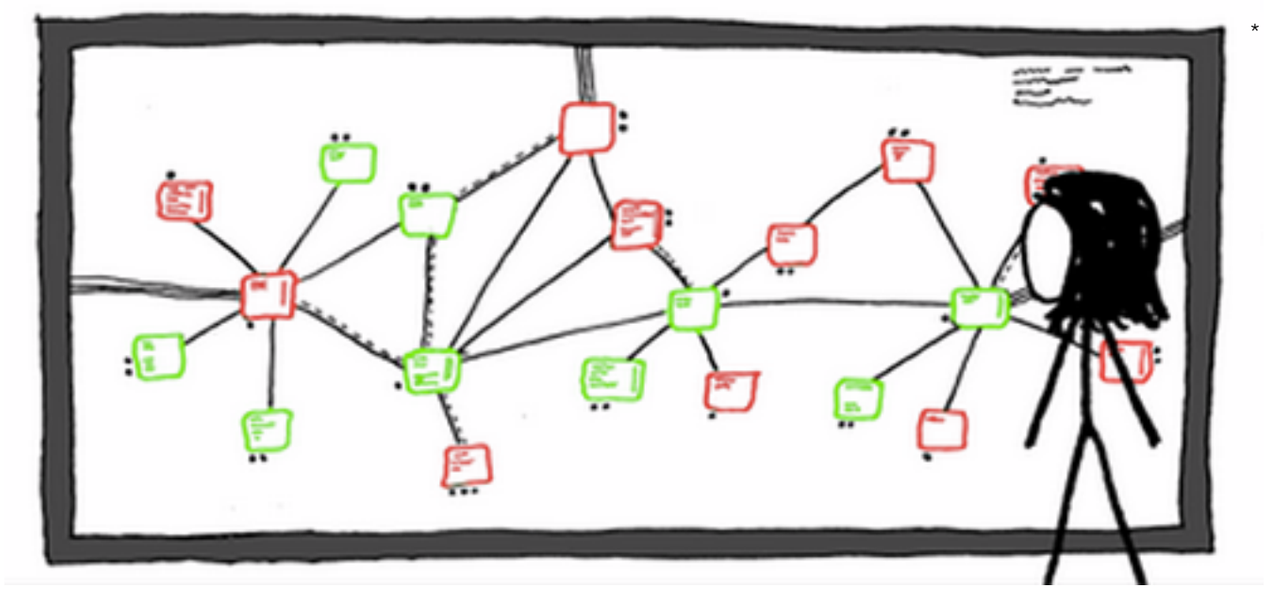

*

The Network Layer

INST346

Licensed under the Creative Commons Attribution-NonCommercial-ShareAlike License: http://creativecommons.org/licenses/by-nc-sa/2.0/

*Image from Randall Munroe's https://xkcd.com/350/

Today's Agenda

- Quiz 10
- HW 4
- A Day in the Life continued…

Licensed under the Creative Commons Attribution-NonCommercial-ShareAlike License: http://creativecommons.org/licenses/by-nc-sa/2.0/

Quiz 10

Licensed under the Creative Commons Attribution-NonCommercial-ShareAlike License: http://creativecommons.org/licenses/by-nc-sa/2.0/

Question 1

1 / 1 pts

Match the routing scenario to the appropriate routing algorithm:

Correct!

Routing with an ISP — OSPF

Correct!

Routing Between ISPs — BGP

Other Incorrect Match Options:

- NAT
- FTP

Cody Buntain: Lecture Slides for *Technologies Infrastructure and Architecture*
Licensed under the Creative Commons Attribution-NonCommercial-ShareAlike License: http://creativecommons.org/licenses/by-nc-sa/2.0/

Question 2

1 / 1 pts

Given the attached graph representation of a network, select the neighbors of router "z".

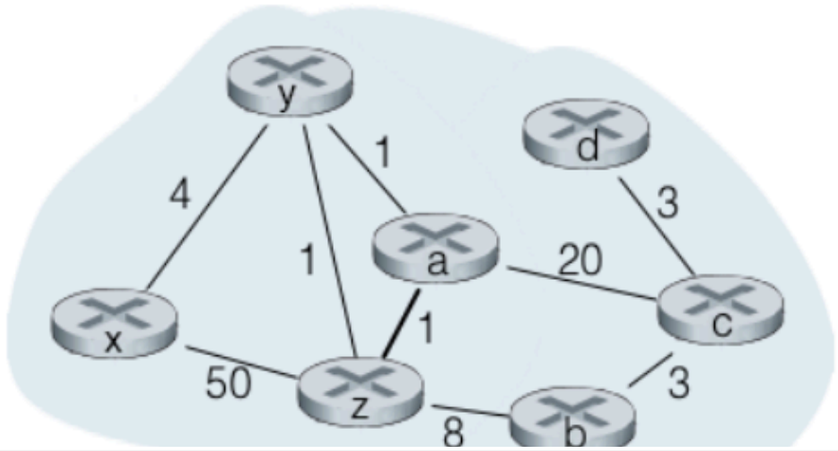

- [ ] d

Correct! - [x] b

- [ ] z

Correct! - [x] y

- [ ] c

Correct! - [x] a

Correct! - [x] x

Cody Buntain: Lecture Slides for *Technologies Infrastructure and Architecture*
Licensed under the Creative Commons Attribution-NonCommercial-ShareAlike License: http://creativecommons.org/licenses/by-nc-sa/2.0/

Question 3

3 / 3 pts

Given the attached graph representation of a network, select the shortest path(s) from router "d" to router "x" by hop count?

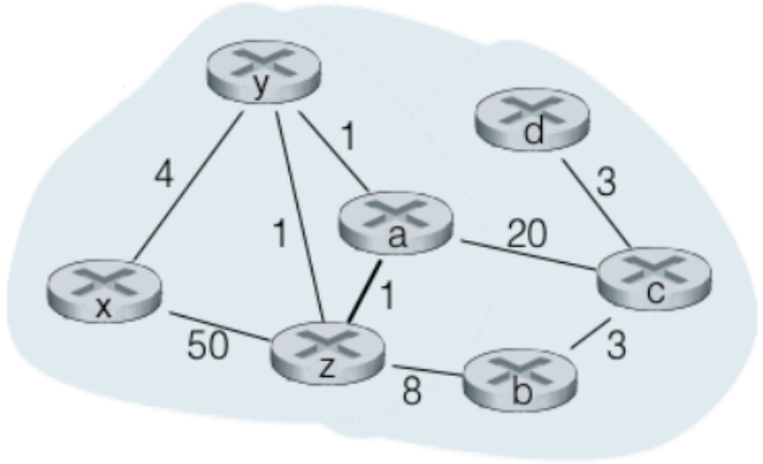

- [ ] d, c, b, z, y, x
- [ ] d, c, a, x

Correct!

- [x] **d, c, b, z, x**

Correct!

- [x] **d, c, a, y, x**
- [ ] d, c, b, x
- [ ] d, x

Correct!

- [x] **d, c, a, z, x**
- [ ] d, c, b, a, x

Cody Buntain: Lecture Slides for *Technologies Infrastructure and Architecture*
Licensed under the Creative Commons Attribution-NonCommercial-ShareAlike License: http://creativecommons.org/licenses/by-nc-sa/2.0/

Question 4

3 / 3 pts

Given the attached graph representation of a network, select the **least-cost path**(s) from router "d" to router "x"?

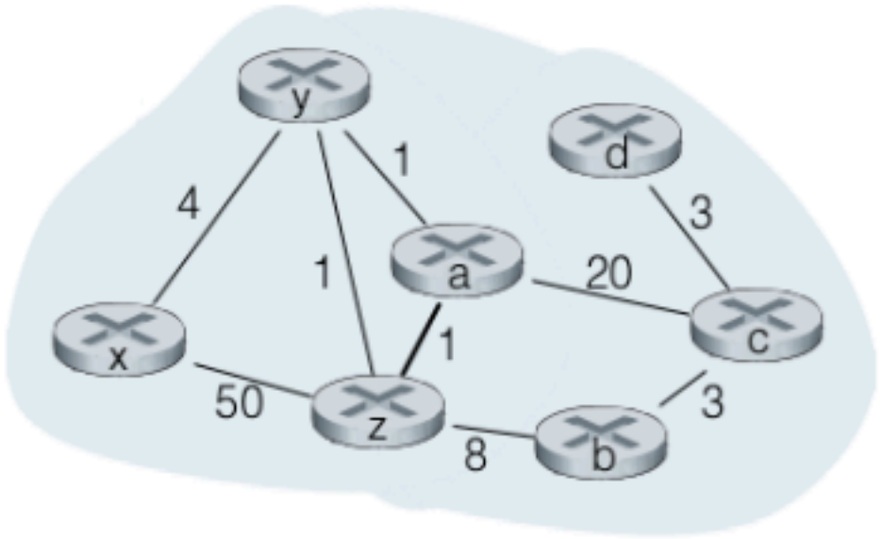

- [ ] d, c, a, y, x
- [ ] d, c, b, a, x
- [x] **d, c, b, z, y, x**

Correct!

- [ ] d, c, a, x

Cody Buntain: Lecture Slides for *Technologies Infrastructure and Architecture*
Licensed under the Creative Commons Attribution-NonCommercial-ShareAlike License: http://creativecommons.org/licenses/by-nc-sa/2.0/

Question 5 1 / 1 pts

Which routing algorithm requires each router to have complete knowledge of the network topology?

- Distance Vector
- Link-State (Correct!)
- NAT
- BGP

Cody Buntain: Lecture Slides for *Technologies Infrastructure and Architecture*
Licensed under the Creative Commons Attribution-NonCommercial-ShareAlike License: http://creativecommons.org/licenses/by-nc-sa/2.0/

Question 6

1 / 1 pts

Which routing algorithm relies on neighbors to infer the topology of the network?

Correct!

- Distance Vector
- NAT
- OSPF
- Link-State

Cody Buntain: Lecture Slides for *Technologies Infrastructure and Architecture*
Licensed under the Creative Commons Attribution-NonCommercial-ShareAlike License: http://creativecommons.org/licenses/by-nc-sa/2.0/

Question 7 1 / 1 pts

Which issue describes the count-to-infinity problem?

When a neighboring link's cost decreases from a small value to a large cost, and the network must slowly count down to the actual weight.

When a distance vector is sent to multiple routers, counting up the number of hosts.

Correct!

When a neighboring link's cost increases from a small value to a large cost, and the network must slowly count up to the actual weight.

Cody Buntain: Lecture Slides for *Technologies Infrastructure and Architecture*
Licensed under the Creative Commons Attribution-NonCommercial-ShareAlike License: http://creativecommons.org/licenses/by-nc-sa/2.0/

Question 8

1 / 1 pts

Which technique is used to avoid the count-to-infinity problem?

Correct!

- (•) Poisoned Reverse
- ( ) Distance Vector
- ( ) Link-State
- ( ) Count Backward

Cody Buntain: Lecture Slides for *Technologies Infrastructure and Architecture*
Licensed under the Creative Commons Attribution-NonCommercial-ShareAlike License: http://creativecommons.org/licenses/by-nc-sa/2.0/

Question 9 1 / 1 pts

Given two networks of the same structure, when comparing Distance Vector and Link-State, which routing algorithm has the potential to send fewer messages when a link cost changes?

Correct!

- (•) Distance Vector
- ( ) Link-State

Cody Buntain: Lecture Slides for *Technologies Infrastructure and Architecture*
Licensed under the Creative Commons Attribution-NonCommercial-ShareAlike License: http://creativecommons.org/licenses/by-nc-sa/2.0/

Question 10 1 / 1 pts

Given two networks of the same structure, when comparing Distance Vector and Link-State, which routing algorithm has the potential to be more secure?

Correct!

- (•) Link-State
- ( ) Distance Vector

Cody Buntain: Lecture Slides for *Technologies Infrastructure and Architecture*
Licensed under the Creative Commons Attribution-NonCommercial-ShareAlike License: http://creativecommons.org/licenses/by-nc-sa/2.0/

Question 11 1 / 1 pts

Given two networks of the same structure, when comparing Distance Vector and Link-State, which routing algorithm has the higher maximum number of messages (and therefore time needed) that might have to be transmitted when a link cost changes?

Correct!

- (•) Distance Vector
- ( ) Link-State

Cody Buntain: Lecture Slides for *Technologies Infrastructure and Architecture*
Licensed under the Creative Commons Attribution-NonCommercial-ShareAlike License: http://creativecommons.org/licenses/by-nc-sa/2.0/

Question 12 1 / 1 pts

If a small collection of servers in an ISP push out routing tables to the ISP's routers, is this control plane approach considered centralized or decentralized network control?

- Decentralized
- Centralized

Correct!

Cody Buntain: Lecture Slides for *Technologies Infrastructure and Architecture*
Licensed under the Creative Commons Attribution-NonCommercial-ShareAlike License: http://creativecommons.org/licenses/by-nc-sa/2.0/

Homework 4 Solutions

Licensed under the Creative Commons Attribution-NonCommercial-ShareAlike License: http://creativecommons.org/licenses/by-nc-sa/2.0/

Questions about Lab 4?

Licensed under the Creative Commons Attribution-NonCommercial-ShareAlike License: http://creativecommons.org/licenses/by-nc-sa/2.0/

A Day in the Life…

Licensed under the Creative Commons Attribution-NonCommercial-ShareAlike License: http://creativecommons.org/licenses/by-nc-sa/2.0/

“A Day in the Life…”

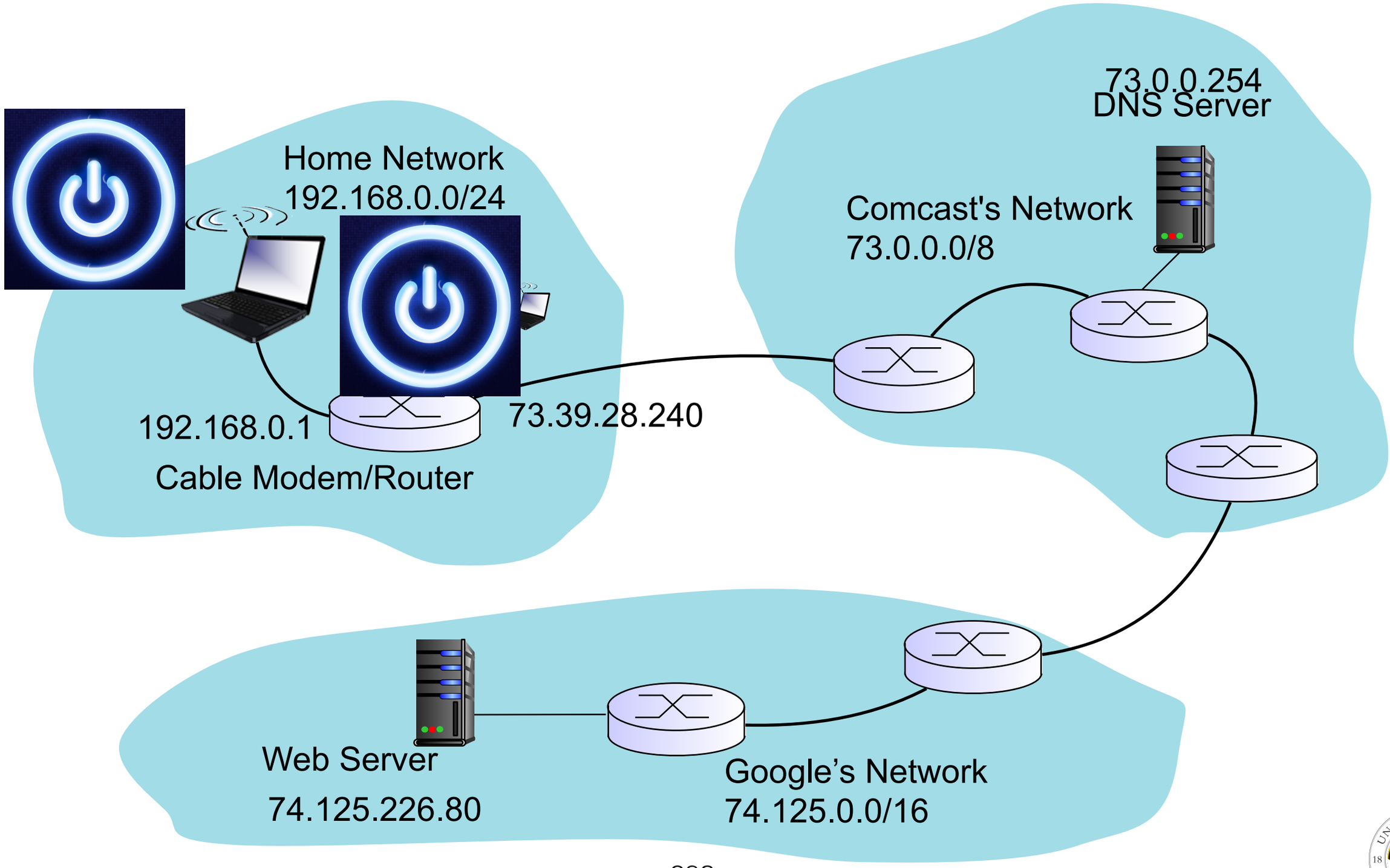

Cody Buntain: Lecture Slides for *Technologies Infrastructure and Architecture*
Licensed under the Creative Commons Attribution-NonCommercial-ShareAlike License: http://creativecommons.org/licenses/by-nc-sa/2.0/

"A Day in the Life…"

- Laptop turns on, needs:
  - An IP address
  - The address of its default gateway router
  - The address of the primary DNS server
- Uses DHCP to obtain its IP address

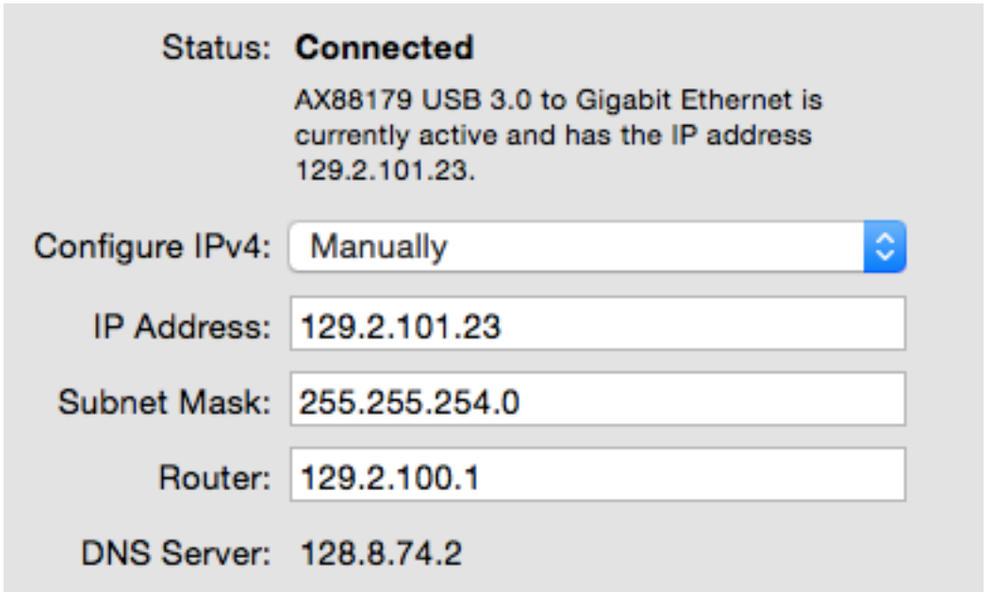

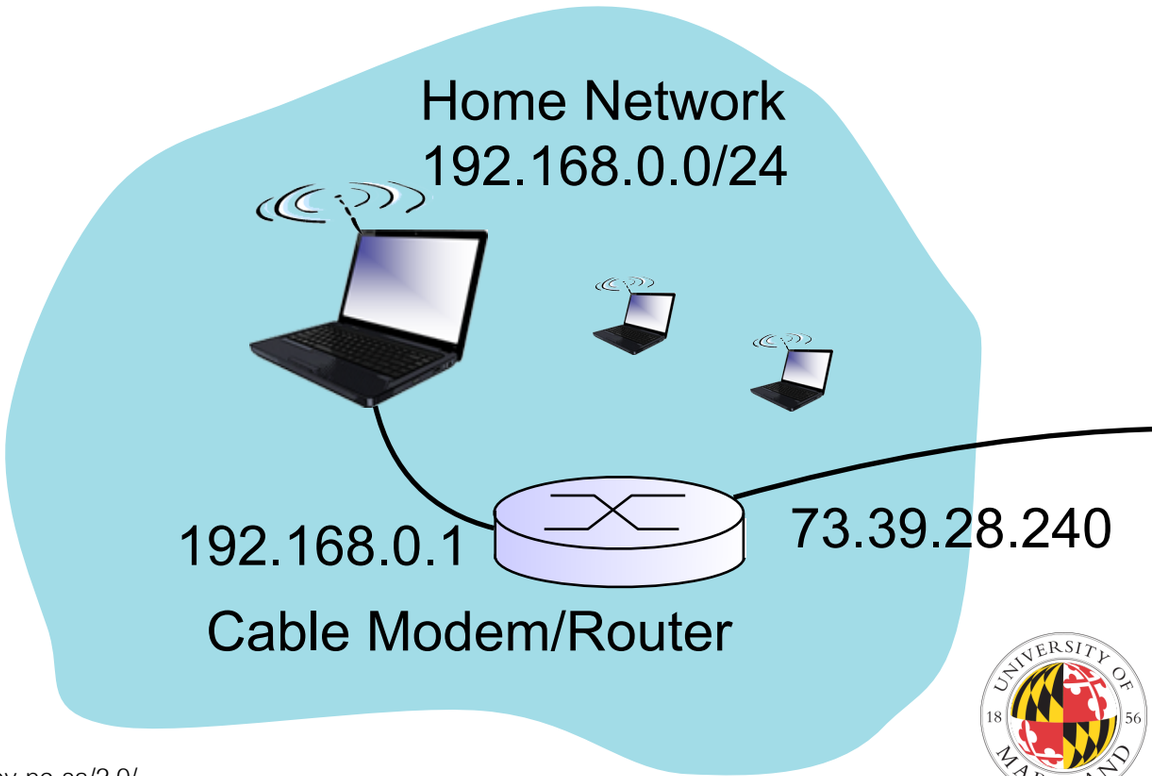

Licensed under the Creative Commons Attribution-NonCommercial-ShareAlike License: http://creativecommons.org/licenses/by-nc-sa/2.0/

"A Day in the Life…"

1. Laptop's DHCP client creates a **DHCP discover** msg to find DHCP server
   - Provided by local router
2. DHCP discover message **encapsulated** in UDP
   - Source Port: 68
     Destination Port: 67
3. **UDP segment** encap-ed in IP
   - Source IP: 0.0.0.0
     Destination IP: 255.255.255.255
4. **IP datagram** encap-ed in Ethernet
   - Source MAC: aa:bb:cc:dd:ee:ff
     Destination MAC: FF:FF:FF:FF:FF:FF
5. **Ethernet frame** transmitted to the local network

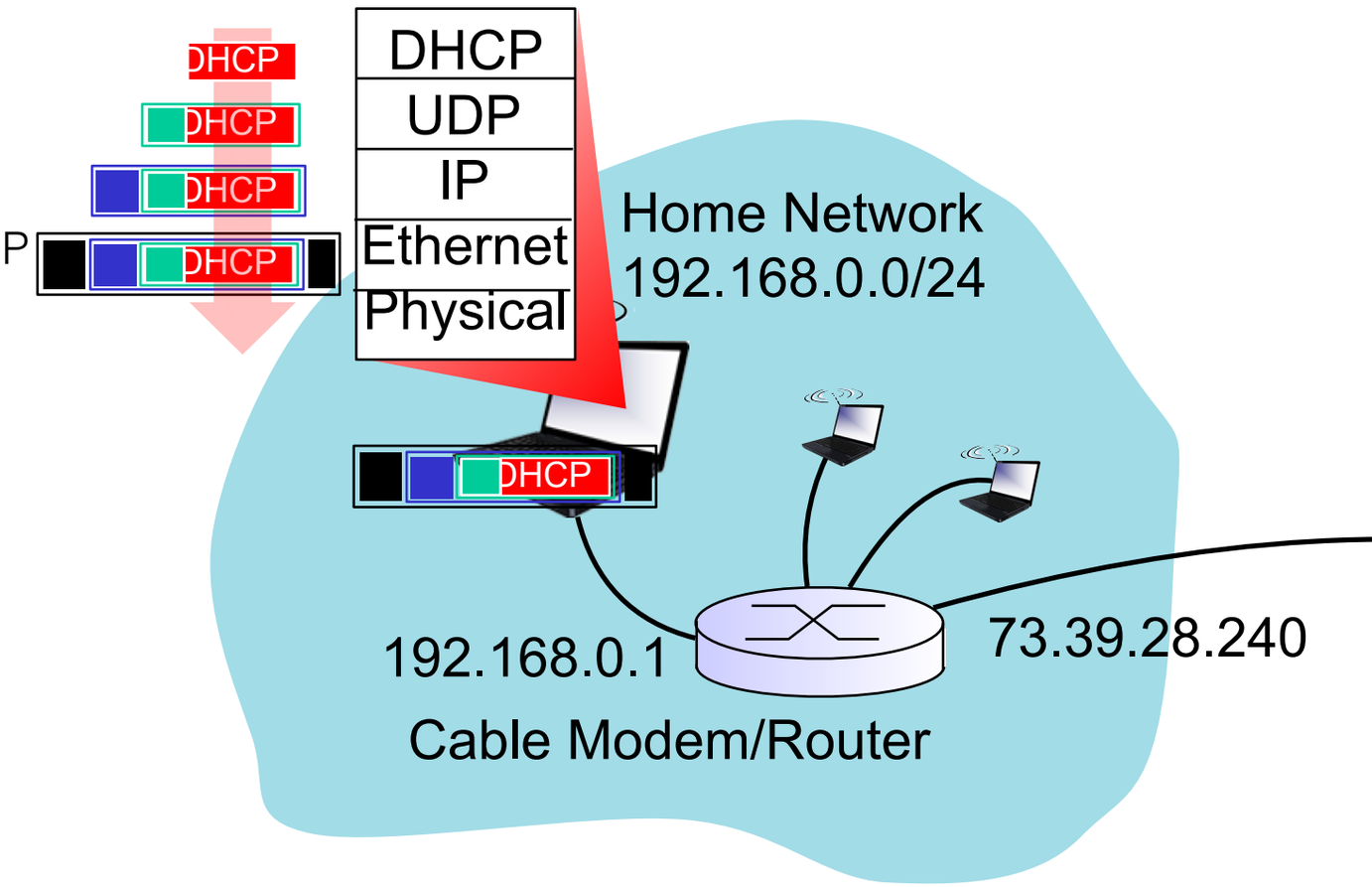

Licensed under the Creative Commons Attribution-NonCommercial-ShareAlike License: http://creativecommons.org/licenses/by-nc-sa/2.0/

“A Day in the Life…”

1. Ethernet frame with DHCP discover message is sent to all nodes on the LAN

2. Router receives frame, unwraps it, and passes DHCP discover to DHCP server

3. DHCP server responds with a **DHCP offer**

- Src Port: 67, Dst. Port: 68

- Src IP: 192.168.0.1,
  Dst. IP: 255.255.255.255

- Src. MAC: 11:22:33:aa:bb:cc,
  Dst. MAC: ff:ff:ff:ff:ff:ff

- Also includes default gateway and DNS

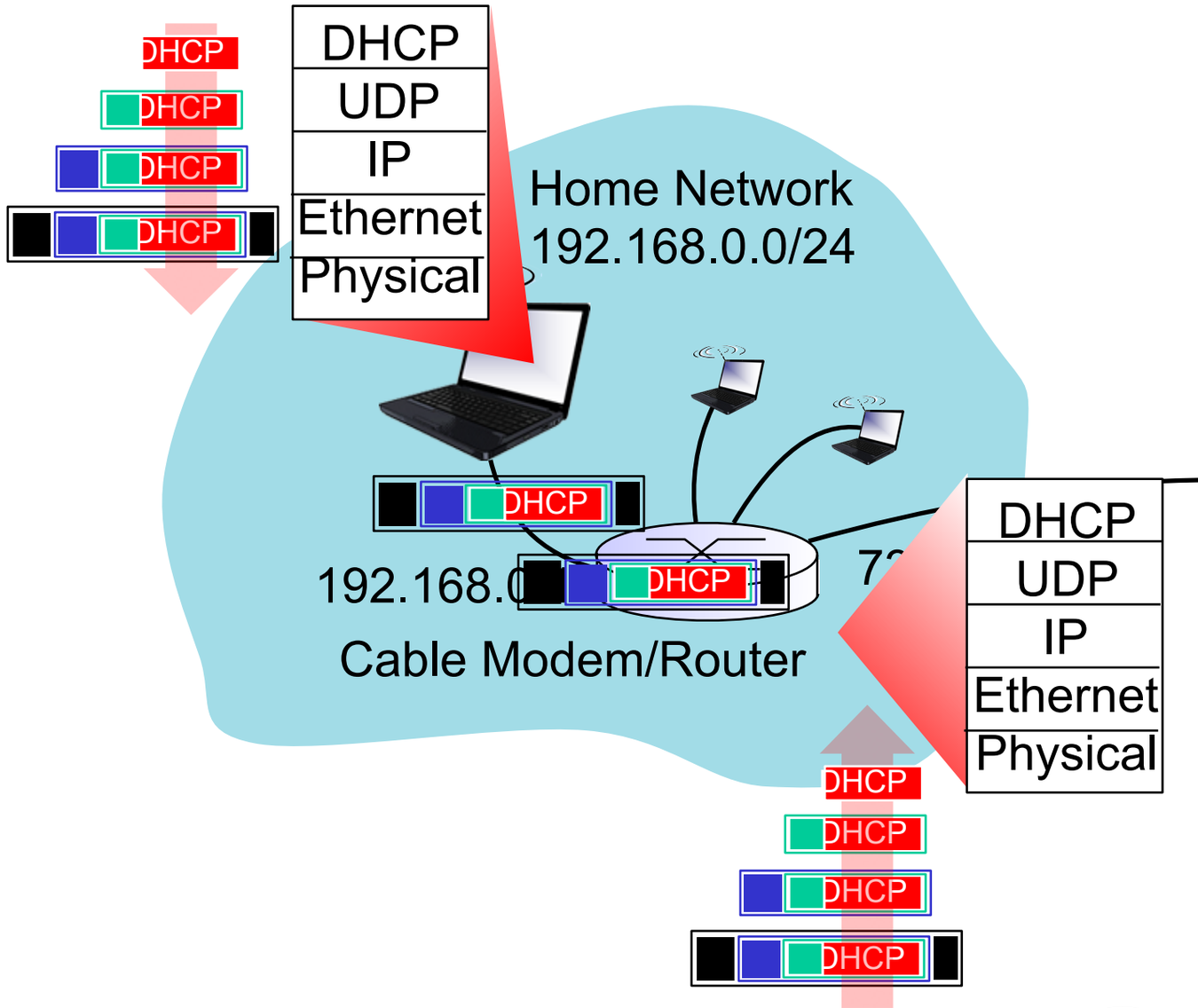

Licensed under the Creative Commons Attribution-NonCommercial-ShareAlike License: http://creativecommons.org/licenses/by-nc-sa/2.0/

“A Day in the Life…”

1. DHCP offer is broadcast to all nodes on the LAN
2. Laptop receives DHCP offer
3. Laptop responds with **DHCP request** message
   - Broadcast packet
4. Router approves DHCP request with **DHCP ACK**
   - Destination still broadcast

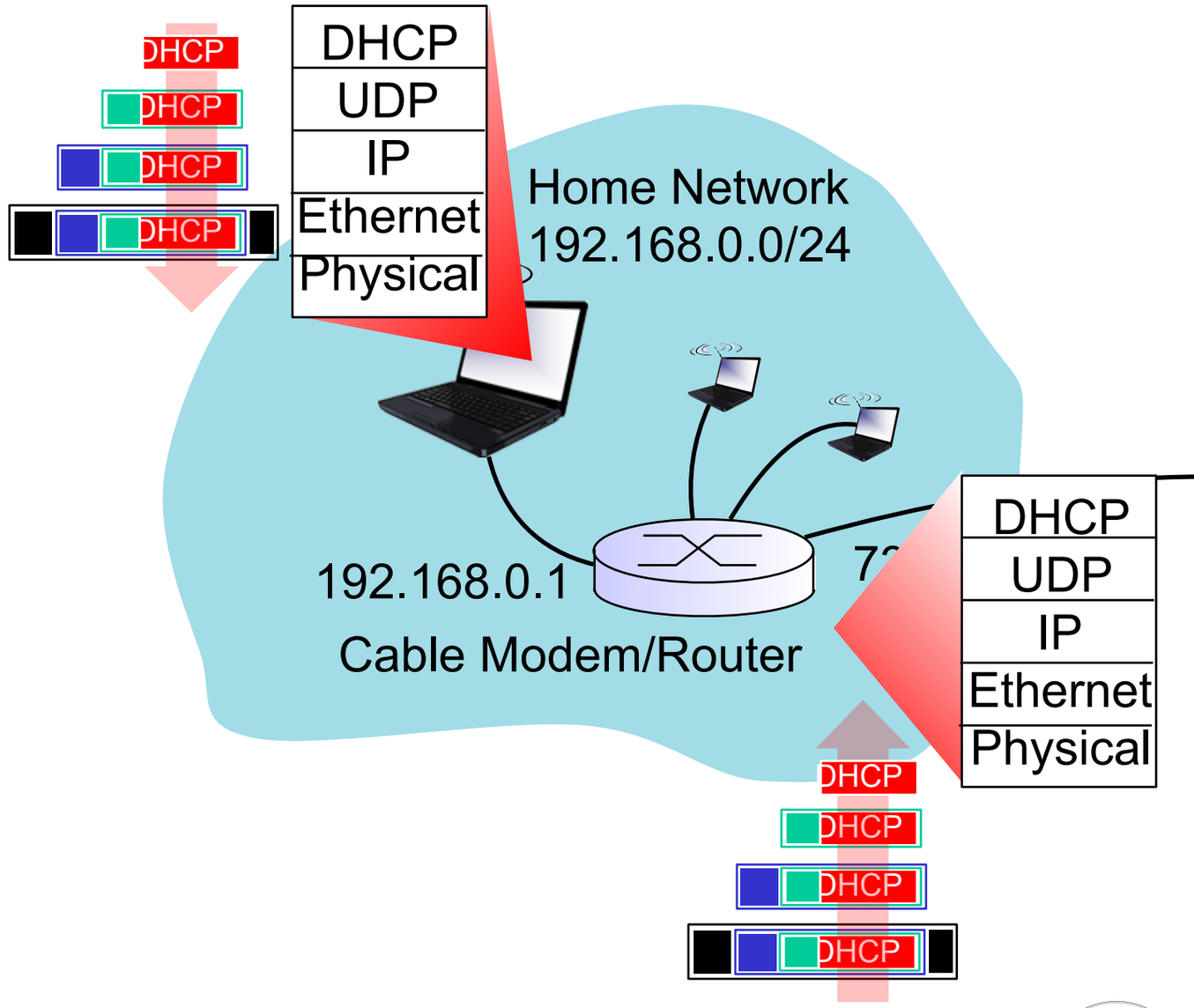

Licensed under the Creative Commons Attribution-NonCommercial-ShareAlike License: http://creativecommons.org/licenses/by-nc-sa/2.0/

“A Day in the Life…”

- Laptop now has an IP address and DNS config from router
- Note all communication was broadcast to the entire LAN

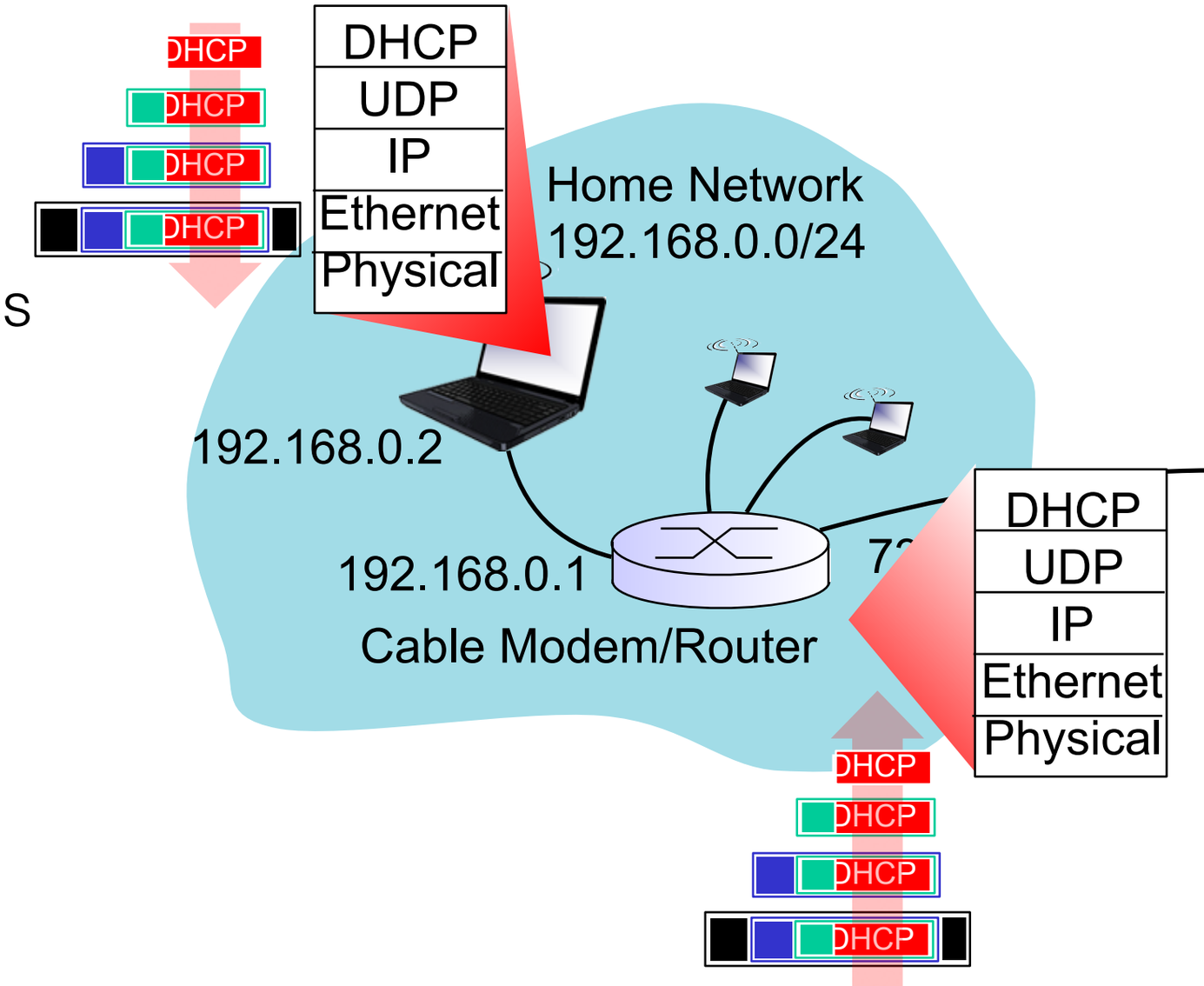

Licensed under the Creative Commons Attribution-NonCommercial-ShareAlike License: http://creativecommons.org/licenses/by-nc-sa/2.0/

“A Day in the Life…”

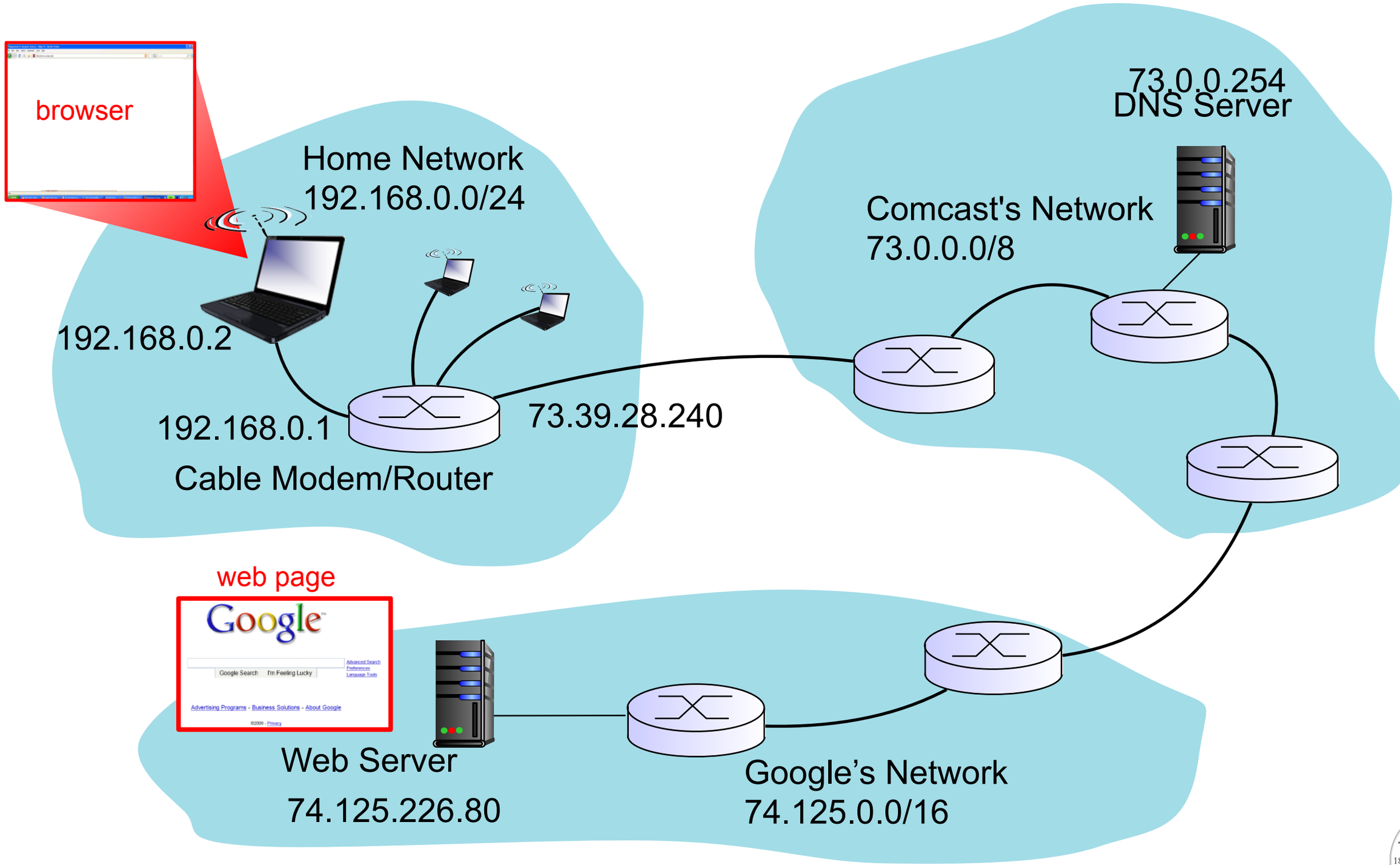

Cody Buntain: Lecture Slides for *Technologies Infrastructure and Architecture*
Licensed under the Creative Commons Attribution-NonCommercial-ShareAlike License: http://creativecommons.org/licenses/by-nc-sa/2.0/

“A Day in the Life…”

- User types “www.google.com” into browser

    1. Computer does not know the IP address for this domain name
    2. Local DNS client checks cache, which is empty
    3. DNS client creates a DNS A-type query and sends to primary DNS server (your cable modem/router)

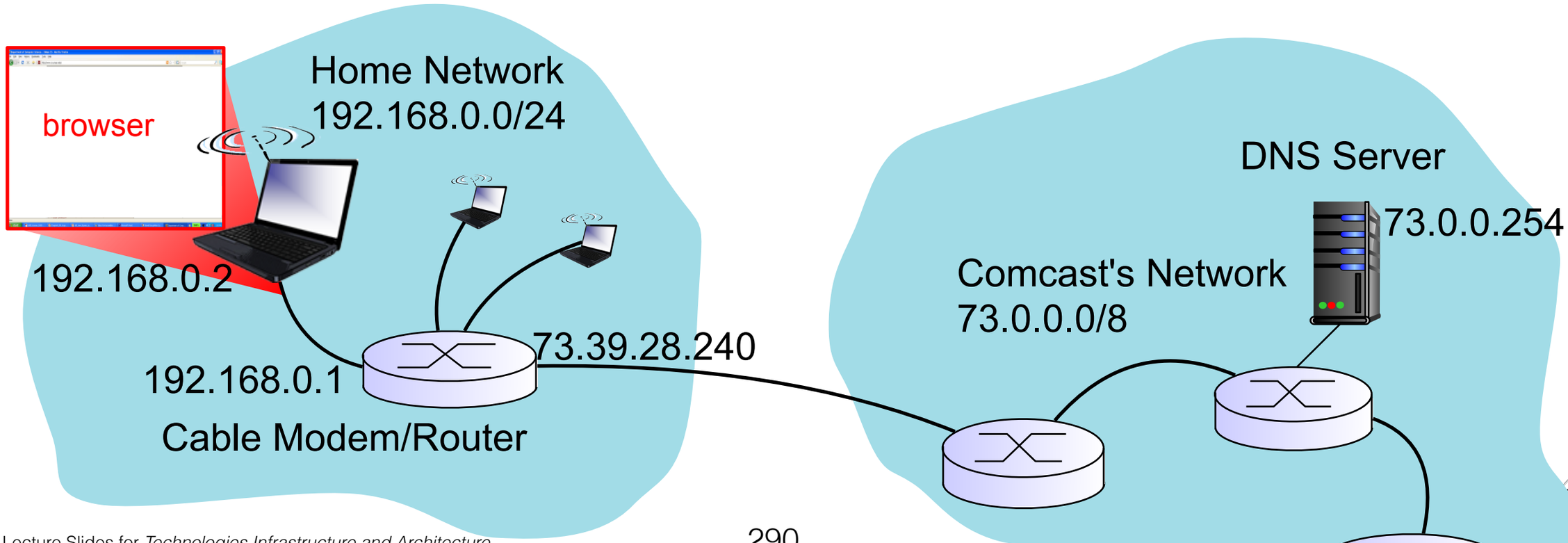

Cody Buntain: Lecture Slides for *Technologies Infrastructure and Architecture*
Licensed under the Creative Commons Attribution-NonCommercial-ShareAlike License: http://creativecommons.org/licenses/by-nc-sa/2.0/

“A Day in the Life…”

1. DNS uses UDP, so DNS query is encapsulated in UDP packet (src port: 53, dest port: 53)

2. UDP builds checksum of request and embeds it in UDP header

3. UDP is encapsulated in IP (src IP: 192.168.0.2, dst IP: 192.168.0.1) and sent to Network Layer

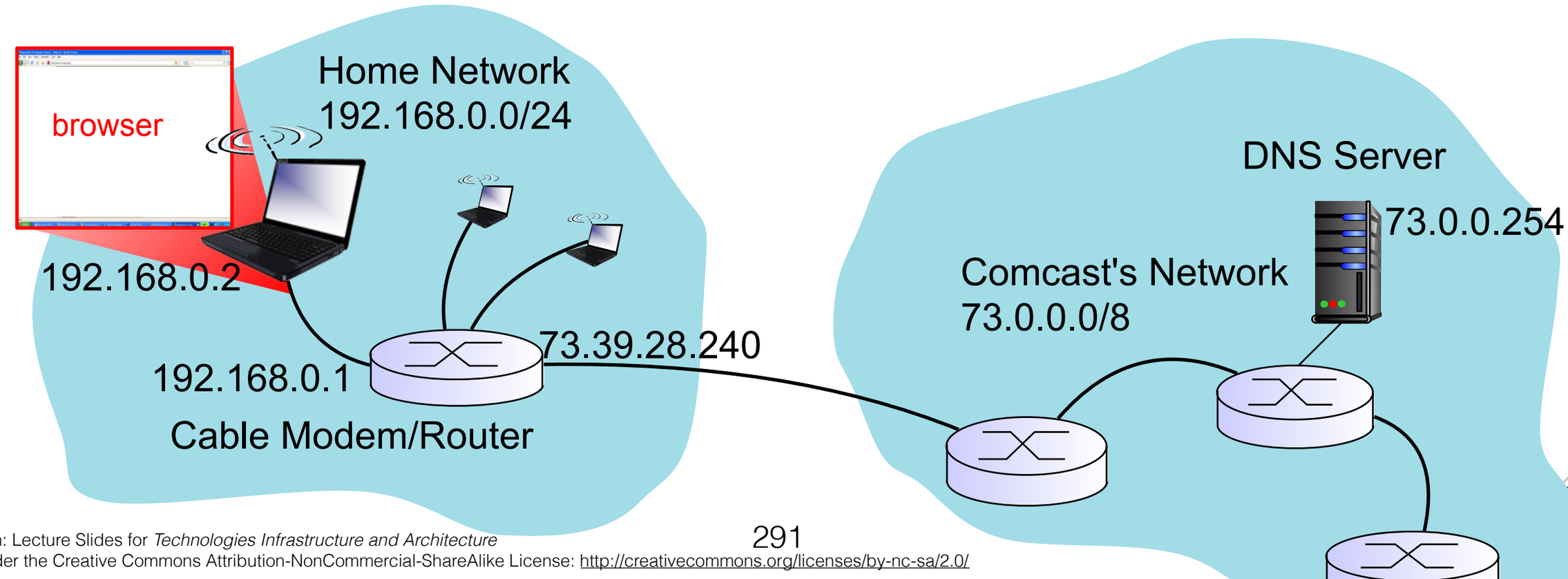

Cody Buntain: Lecture Slides for *Technologies Infrastructure and Architecture*
Licensed under the Creative Commons Attribution-NonCommercial-ShareAlike License: http://creativecommons.org/licenses/by-nc-sa/2.0/

“A Day in the Life…”

1. Laptop’s network layer sends encapsulated DNS query to router IP address
2. Router receives IP datagram on internal interface
3. Router checks if the internal interface is in the same subnet as destination IP address
4. Router checks it is destination for IP address, and receives IP packet for processing

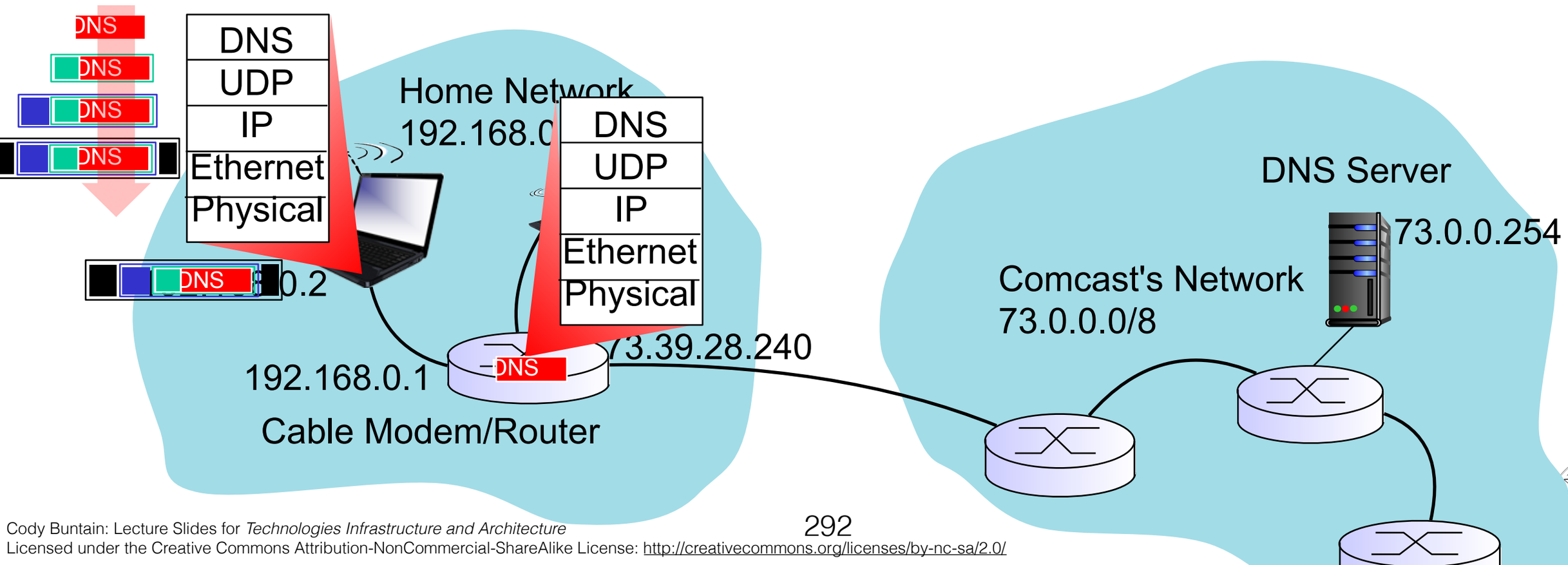

Cody Buntain: Lecture Slides for *Technologies Infrastructure and Architecture*
Licensed under the Creative Commons Attribution-NonCommercial-ShareAlike License: http://creativecommons.org/licenses/by-nc-sa/2.0/

“A Day in the Life…”

1. Router unpacks UDP segment from IP datagram, checks its checksum, and delivers it to DNS application via port-based de-multipliexing

2. Local DNS server receives query and checks cache

    1. If www.google.com is present, send response to client

    2. Else, query ISP’s DNS server via **recursive query**

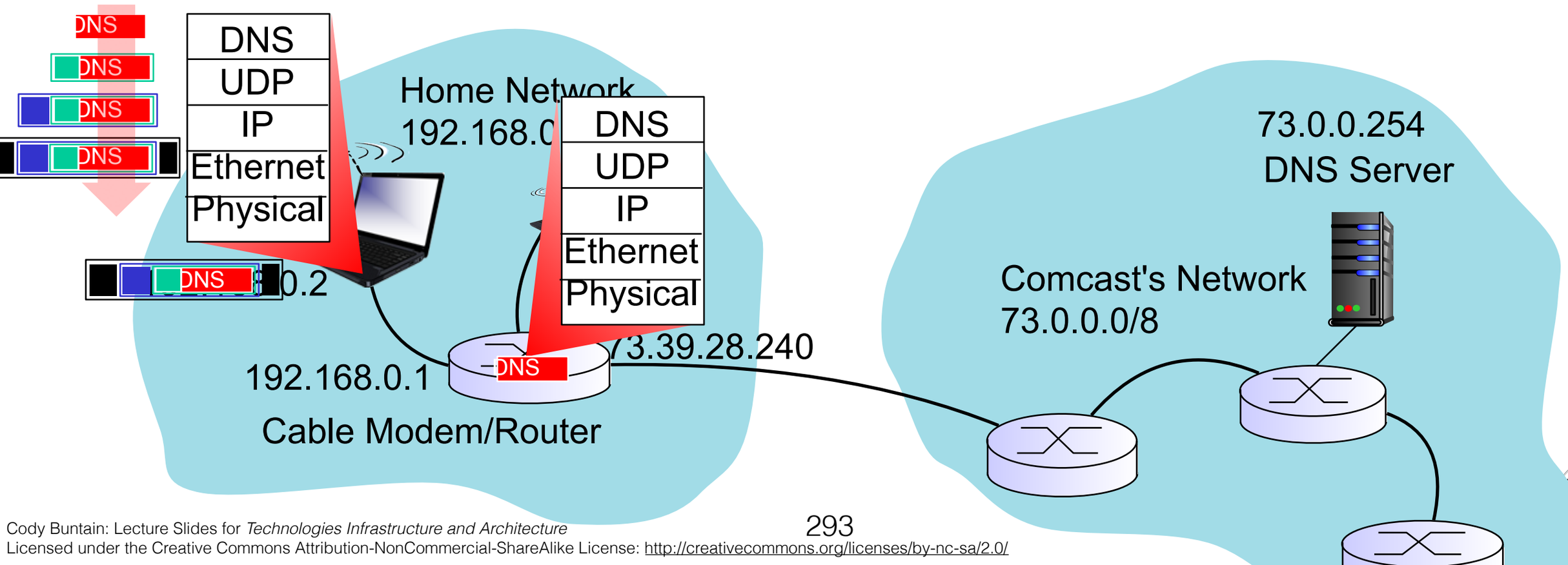

Licensed under the Creative Commons Attribution-NonCommercial-ShareAlike License: http://creativecommons.org/licenses/by-nc-sa/2.0/

"A Day in the Life…"

1. Home router encapsulates this new recursive query in UDP, makes checksum, and sends to IP layer

2. Router checks forwarding table for 73.0.0.254 and sends out on default gateway 0.0.0.0/0, or interface 73.39.28.240

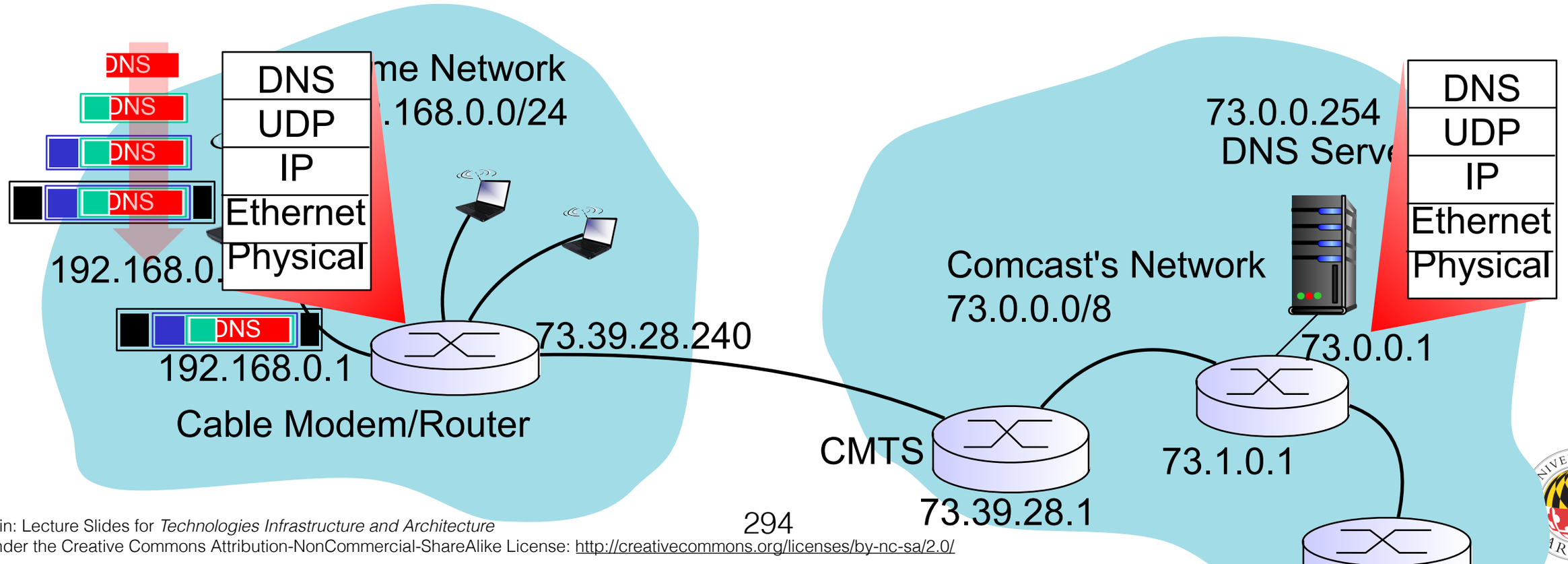

Cody Buntain: Lecture Slides for *Technologies Infrastructure and Architecture*
Licensed under the Creative Commons Attribution-NonCommercial-ShareAlike License: http://creativecommons.org/licenses/by-nc-sa/2.0/

“A Day in the Life…”

1. CMTS receives IP packet from 73.39.28.240 destined for 73.0.0.254

2. CMTS router checks its forwarding table for 73.0.0.254 match
   1. Knows to send it into Comcast’s network via forwarding table

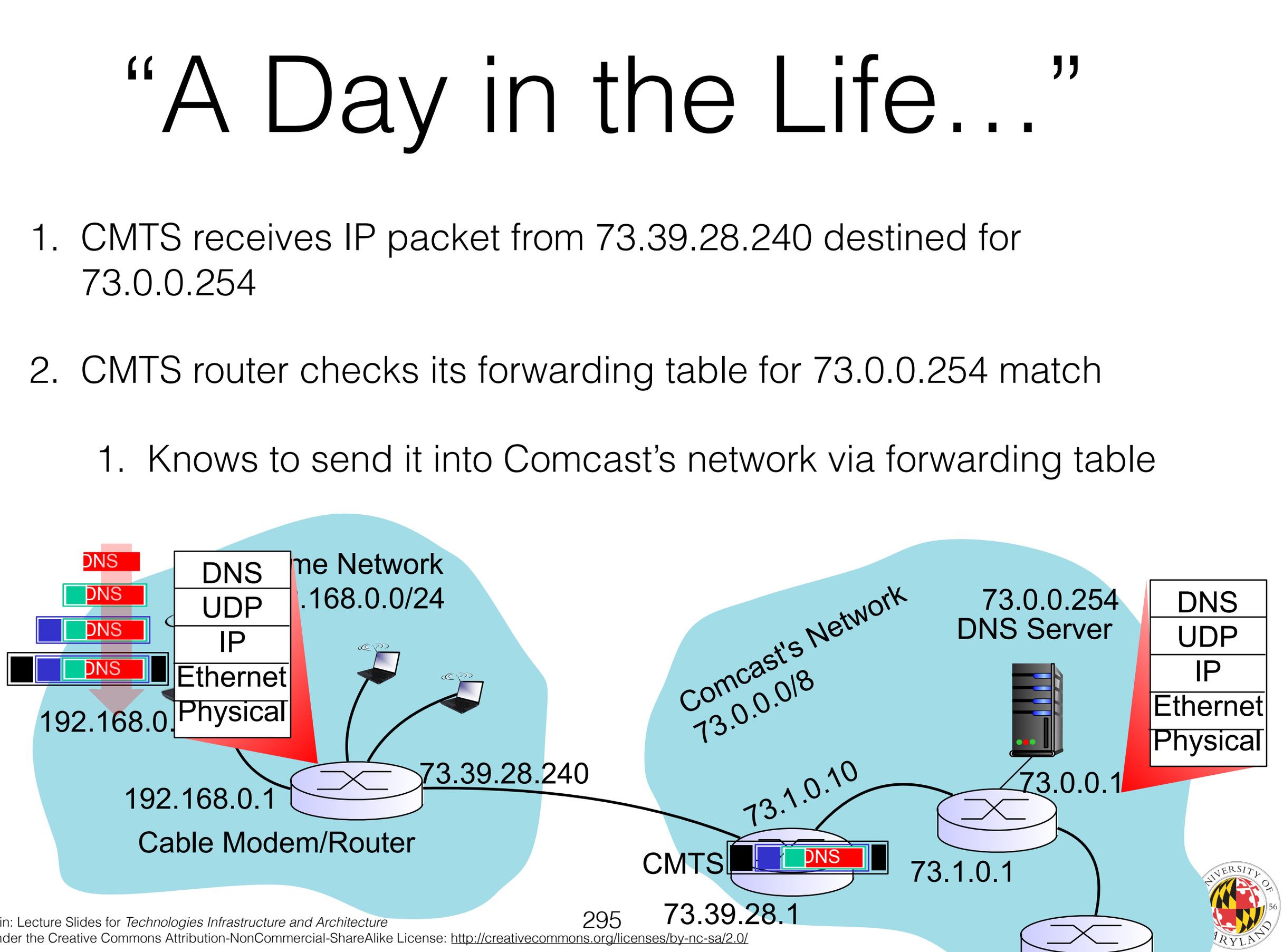

Licensed under the Creative Commons Attribution-NonCommercial-ShareAlike License: http://creativecommons.org/licenses/by-nc-sa/2.0/

“A Day in the Life…”

1. Second Comcast router receives IP packet

2. Checks destination IP, sees destination subnet is on this router, and forwards to DNS server’s link

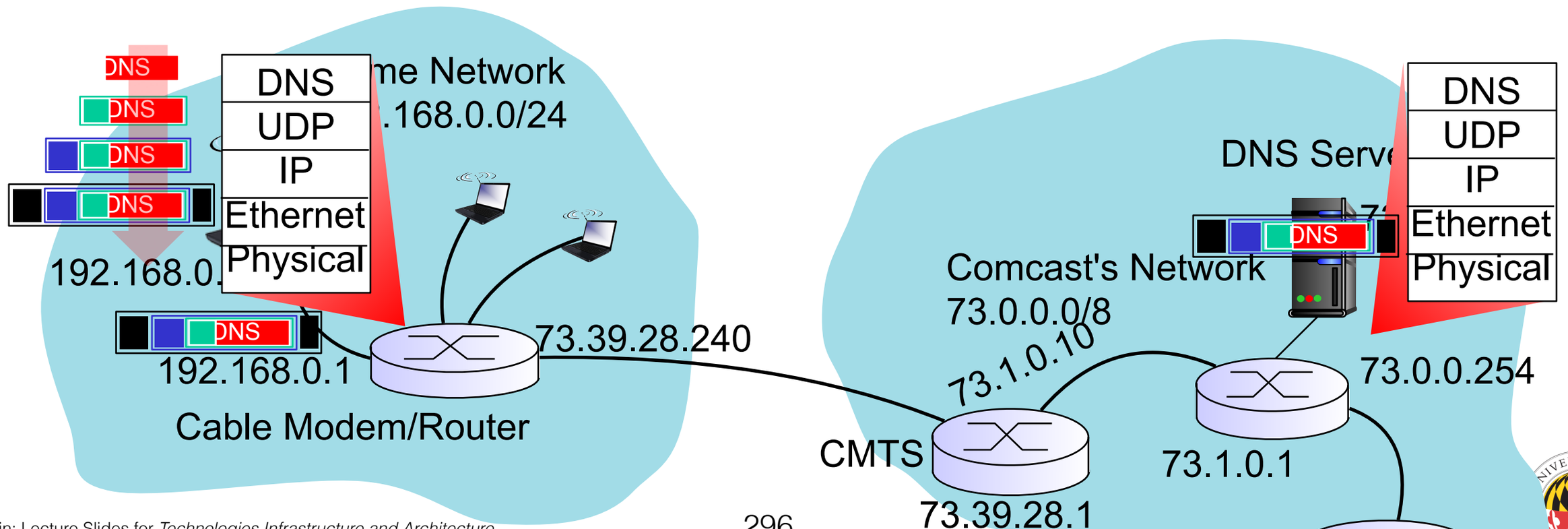

Cody Buntain: Lecture Slides for *Technologies Infrastructure and Architecture*
Licensed under the Creative Commons Attribution-NonCommercial-ShareAlike License: http://creativecommons.org/licenses/by-nc-sa/2.0/

“A Day in the Life…”

1. Home router encapsulates this new recursive query in UDP, makes checksum, and sends to ISP’s DNS via IP layer
2. DNS server receives the IP datagram and UDP segment, demuxes by UDP port, and sends query to DNS server software
3. DNS server then checks its local cache for www.google.com’s IP
    - If in cache, DNS server responds immediately with a DNS answer
    - Not cached + DNS server handles recursion, DNS queries root DNS for .com TLD, .com TLD for goole.com’s Auth DNS, and goole.com’s Auth DNS for www.google.com

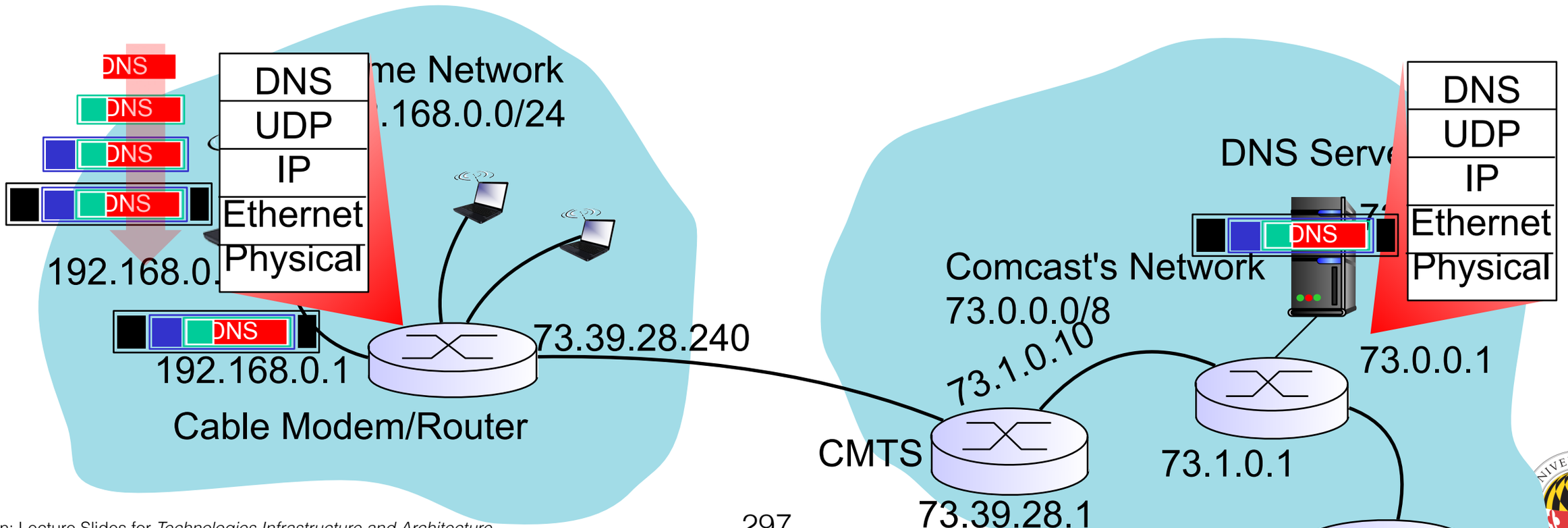

Cody Buntain: Lecture Slides for *Technologies Infrastructure and Architecture*
Licensed under the Creative Commons Attribution-NonCommercial-ShareAlike License: http://creativecommons.org/licenses/by-nc-sa/2.0/

“A Day in the Life…”

1. Comcast’s DNS resolves IP for www.google.com to 74.125.226.80 and sends DNS response back to cable modem

2. Cable modem sends DNS response back to laptop

- Finally! *Phew*

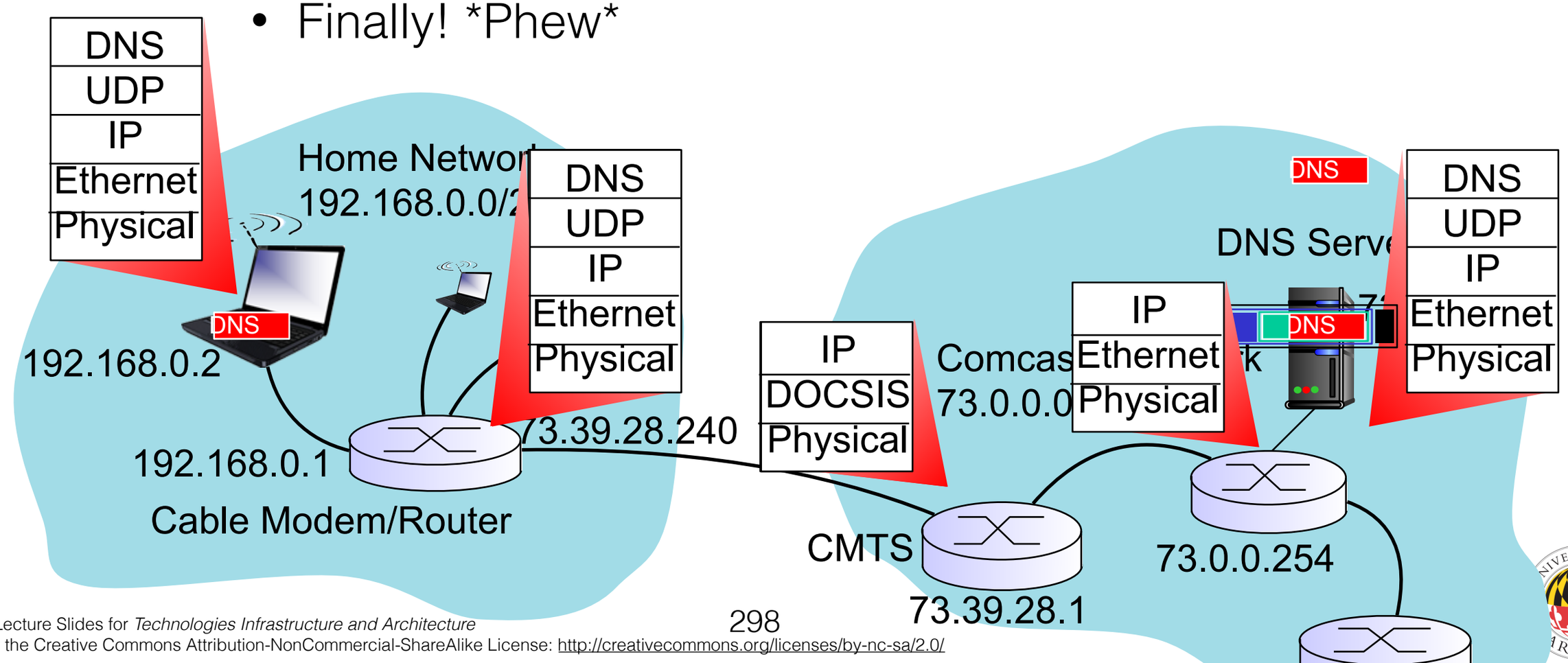

Licensed under the Creative Commons Attribution-NonCommercial-ShareAlike License: http://creativecommons.org/licenses/by-nc-sa/2.0/

“A Day in the Life…”

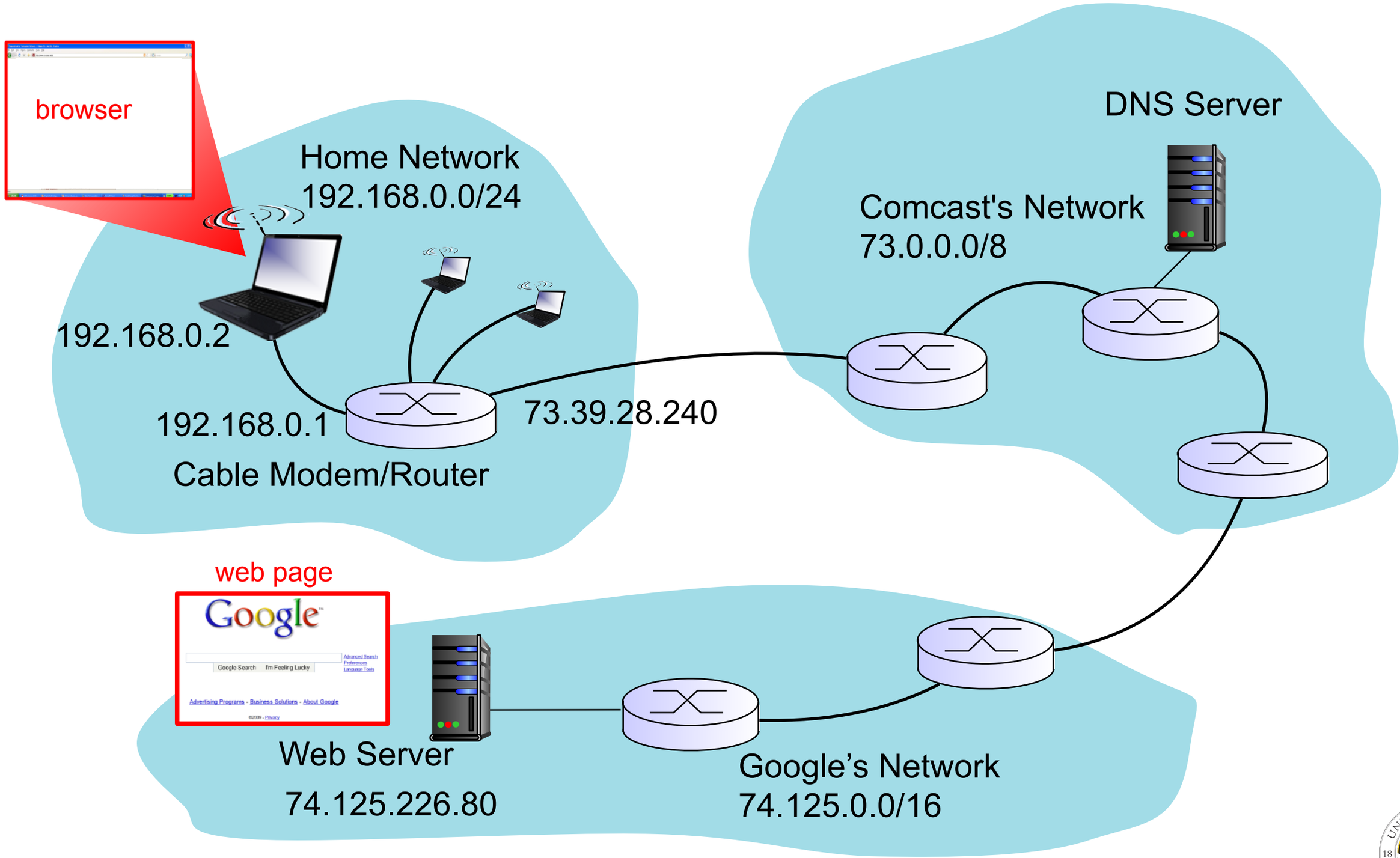

Cody Buntain: Lecture Slides for *Technologies Infrastructure and Architecture*
Licensed under the Creative Commons Attribution-NonCommercial-ShareAlike License: http://creativecommons.org/licenses/by-nc-sa/2.0/

“A Day in the Life…”

- User types “www.google.com” into browser
    1. Laptop **NOW** know the IP address for this domain name
    2. Laptop sends HTTP GET request to IP address
    3. Browser begins the TCP three-way handshake by sending a TCP SYN packet

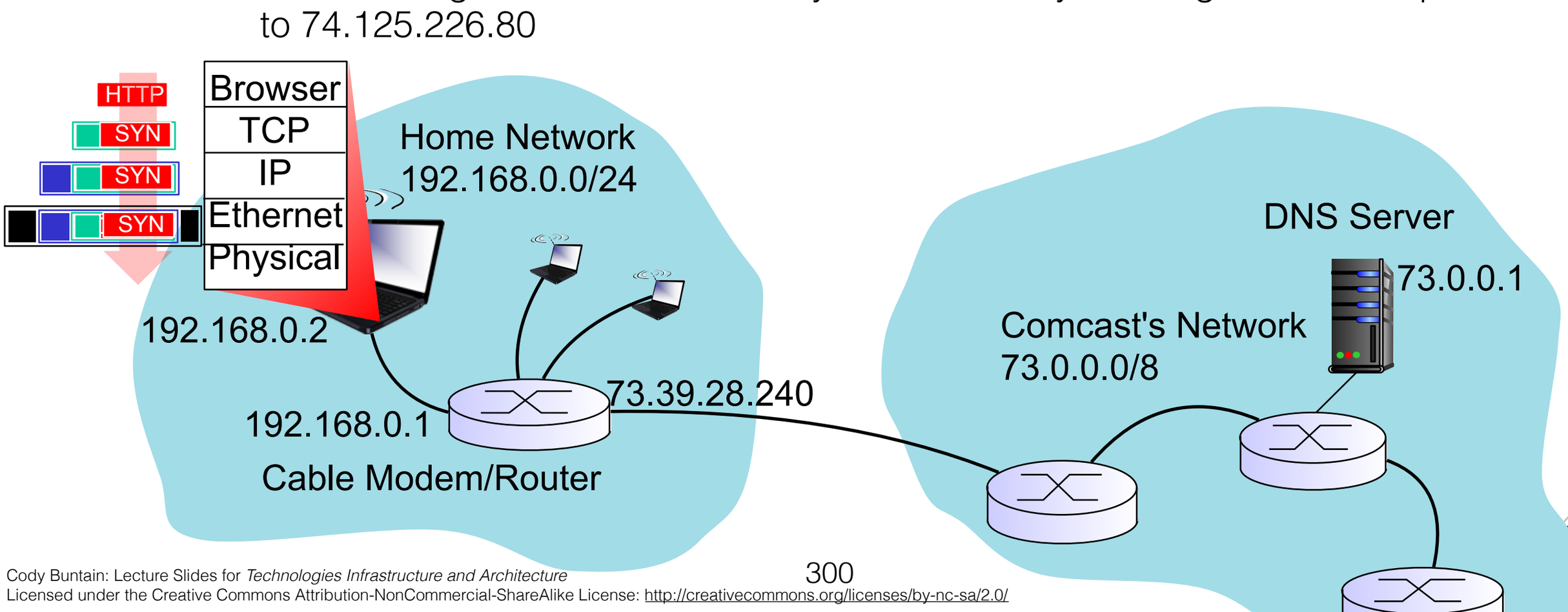

Cody Buntain: Lecture Slides for *Technologies Infrastructure and Architecture*
Licensed under the Creative Commons Attribution-NonCommercial-ShareAlike License: http://creativecommons.org/licenses/by-nc-sa/2.0/

"A Day in the Life…"

- Web server receives IP packet with SYN segment, sends SYNACK to client

- Client responds with ACK, TCP connection established

- ACK contains HTTP GET request as well

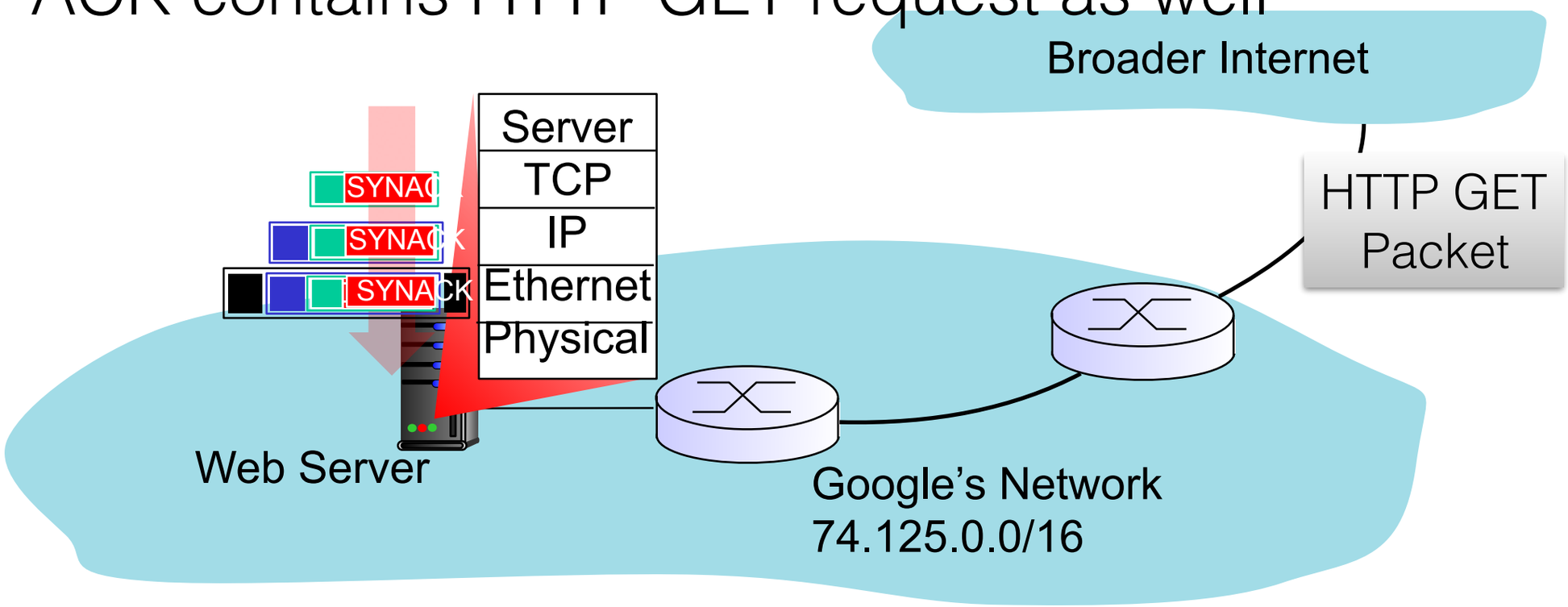

Licensed under the Creative Commons Attribution-NonCommercial-ShareAlike License: http://creativecommons.org/licenses/by-nc-sa/2.0/

"A Day in the Life…"

- Web server receives TCP ACK packet with HTTP GET
- HTTP server responds with HTTP 200 OK message
  - Contains cookies and other headers
- Also contains HTML of page

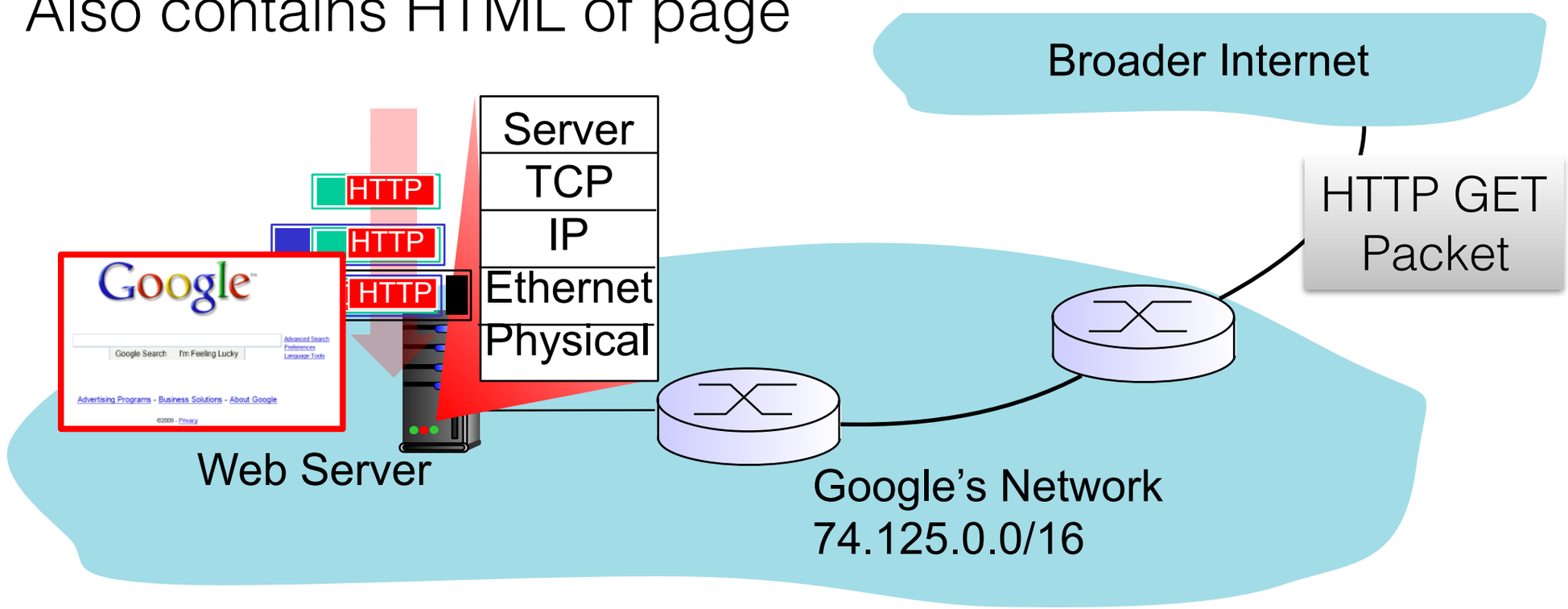

Cody Buntain: Lecture Slides for *Technologies Infrastructure and Architecture*
Licensed under the Creative Commons Attribution-NonCommercial-ShareAlike License: http://creativecommons.org/licenses/by-nc-sa/2.0/

"A Day in the Life…"

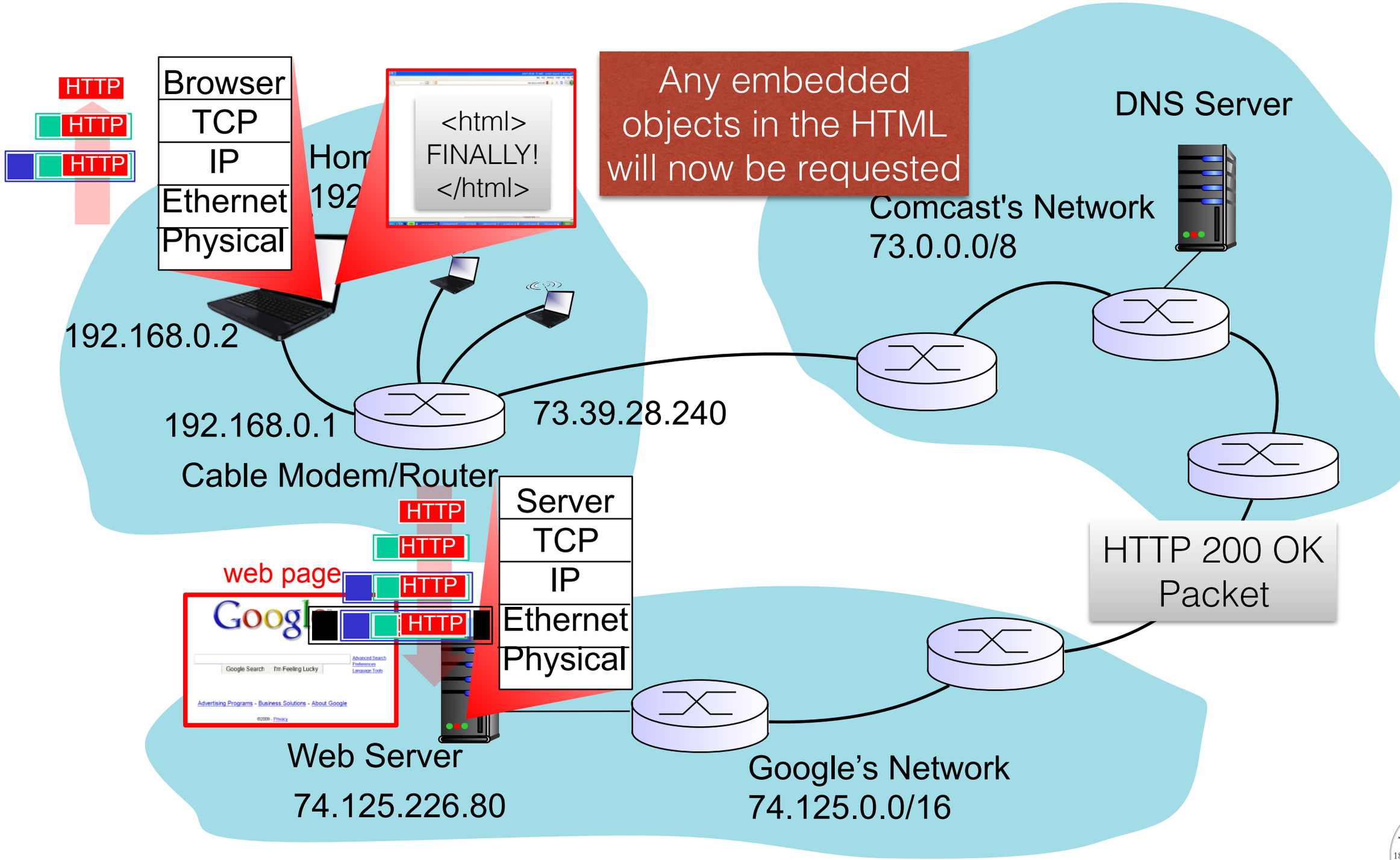

Cody Buntain: Lecture Slides for *Technologies Infrastructure and Architecture*
Licensed under the Creative Commons Attribution-NonCommercial-ShareAlike License: http://creativecommons.org/licenses/by-nc-sa/2.0/

End of Chapter 4!

Licensed under the Creative Commons Attribution-NonCommercial-ShareAlike License: http://creativecommons.org/licenses/by-nc-sa/2.0/